Motion Control Systems

# STEPPING MOTORS CATALOGUE

SANYO DENKI

SANMOTION STEPPING SYSTEMS

# STEPPING MOTORS
# catalogue

SANYO DENKI

SANMOTION
STEPPING SYSTEMS

## Warning / *Attenzione*

- The sole purpose of this catalogue is as a general introduction to our products, in order to allow an orientation as well as a choice among them. Detailed information concerning limitations and installation/utilization procedures are described in the manuals relating to each product. It is therefore essential to strictly refer to these enclosed technical manuals for a correct use, in accordance with current standards.

- All those products for which a speci?c obligation is required, as per law regulation in force in the European Community countries, bear the EC marking stating they are in accordance with the related directives.

- All products are classed as components foreseen to be integrated in a more complex machine or installation by a professional assembler, expert in the ?eld of motor drives and in their related problems. Only a professional assembler can install and put in service this component. The necessary installation recommendations are included in the technical manuals.

- R.T.A. reserves the right to modify the products at any time and without prior notice (including, but not limited to, characteristics, availability and prices).

- *Unico scopo di questo catalogo è una presentazione generale dei prodotti atta a consentire un orientamento e una scelta tra gli stessi. Informazioni precise e dettagliate in merito alle limitazioni e modalità di installazione ed uso sono riportate nei manuali tecnici relativi ai singoli prodotti. Pertanto, per un loro uso corretto e conforme alle normative in vigore, è indispensabile fare riferimento a tali manuali tecnici.*

- *Tutti quei prodotti per i quali vi è obbligo speci?co, ai sensi delle disposizioni di legge vigenti nei paesi della Comunità Europea, recano la marcatura CE attestante la conformità alle direttive che li riguardano.*

- *Tutti i prodotti riportati nel catalogo sono componenti atti ad essere integrati in apparecchiature o macchine più complesse. La loro installazione e messa in servizio deve essere fatta da un assemblatore professionale competente nel settore degli azionamenti per motori e delle loro problematiche. Le necessarie prescrizioni e indicazioni per la installazione sono incluse nei manuali tecnici.*

- *R.T.A. si riserva il diritto di apportare modi?che ai prodotti (includendo, senza limitazione alcuna, caratteristiche, disponibilità e prezzi) in qualsiasi momento e senza preavviso.*

## CONTENTS

Page

INTRODUCTION 2

STEPPING MOTORS

SIZE 1.1" - □ 28 mm 12

SIZE 1.7" - □ 42 mm 13

SIZE 50 mm - □ 50 mm 19

SIZE 2.2" - □ 56 mm 21

SIZE 60 mm - □ 60 mm 31

SIZE 3.4" - Ø 85.8 mm 33

SIZE 3.4" - □ 85.5 mm 40

SIZE 4.2" - □ 106.4 mm 48

CONVERSION TABLE 54

STEPPING MOTORS WITH ENCODER

INTRODUCTION 58

SIZE 1.7" - □ 42 mm 60

SIZE 2.2" - □ 56 mm 61

SIZE 60 mm - □ 60 mm 63

SIZE 3.4" - □ 85.5 mm 64

## R.T.A. GROUP

R.T.A. - HEADQUARTERS

R.T.A. DEUTSCHLAND

R.T.A. IBERICA

- R.T.A. Group is a leading network of companies in the motion control industry. It is number one in Italy in the stepping systems market and number three in Europe in the stepping motor drives segment.
  [Source: IMS Research 2012]
- The Group is based on three operational companies: the headquarters, R.T.A. s.r.l. (ITALY), founded in 1976, R.T.A. Deutschland GmbH (GERMANY), founded in 2001 and R.T.A. IBERICA - Motion Control Systems S.L. (SPAIN), founded in 2008.
- R.T.A. has been producing stepping motor drives since 1976: since then more than 750.000 stepping motor drives have been sold in Italy and in more than 39 countries worldwide.
- Production and sales process quality is guaranteed by a Quality Assurance System certified under the UNI EN ISO 9001 (TUV-50 100 2153) Norm.
- Over time, R.T.A. product line has been enriched through the creation of a partnership with SANYO DENKI, a leading Japanese company producing stepping motors, brushless systems and fans. The Group has been its Italian sole distributor since 1989, while distributorship has been granted in 2001 for Germany and in 2008 for Spain.

## R.T.A. WORLDWIDE

- Since its origins, the Group has always had a strong commitment for international business; that was the reason leading to the decision of opening direct branches in Germany and Spain.
- R.T.A. is also active worldwide through a wide network of distributors, composed by 29 companies operating in more than 39 countries.

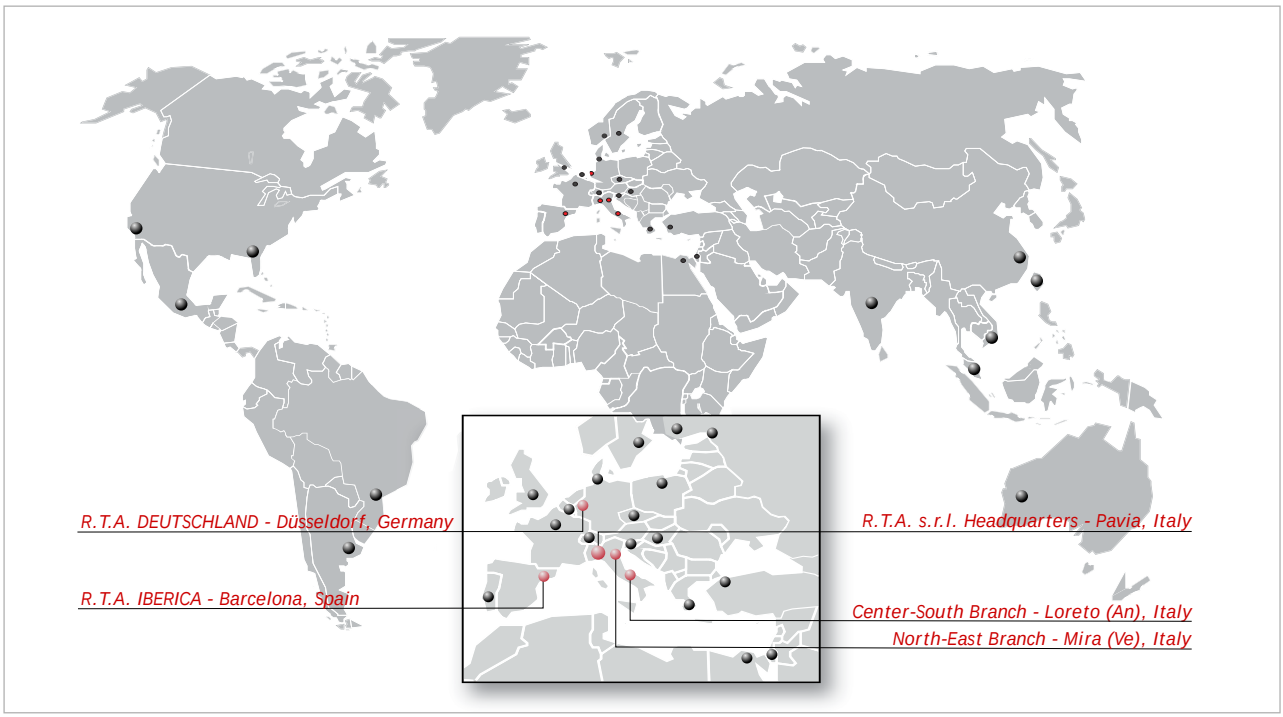

## R&D, PRODUCTION AND WAREHOUSE

R&D AND FIELD APPLICATION

- More than 30-years experience in the motion control industry
- 6 engineers fully dedicated to R&D
- 3 full-time field application engineers

STEPPING MOTOR DRIVES PRODUCTION

- More than 40.000 stepping motor drives produced yearly
- More than 750.000 drives sold since 1976
- Computerized testing line: every single drive is tested twice, by two different operators, guaranteeing a very high reliability
- Warranty: 24 months

INDUSTRIAL STRENGTH

- Wide warehouse of SANYO DENKI products:
  - more than 50.000 stepping motors
  - more than 3.000 AC servosystems
  - more than 5.000 cooling fans
- Very short time-to-market: 97% of orders is processed within one week from order.

## ONLINE SALES: www.rta-store.com

- A wide selection of stepping motor drives available online
- SANYO DENKI stepping motors with flange size from 28 mm up to 106 mm and with holding torque from 12.5 Ncm to 2460 Ncm
- SANYO DENKI cooling fans with frame size from 36 mm to 172 mm.

## MAIN PRODUCTION SITES

Kangawa Works (Japan)

- Total Production capacity: 310,000 stepping motors/month
- Main Factories:
  - Kangawa (Japan) Works since 2009
  - Subic (Philippines) Works since 2000

Subic Works (Philippines)

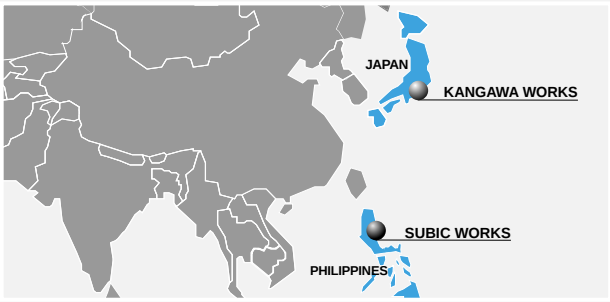


## SANYO DENKI BENEFITS

- High Reliability & Quality
  - Sound experience in manufacturing since 1959
  - ISO 9001 & 14001 certification
  - Strong vertical integration and focus on process control
- Factory Support & Flexibility
  - Large production volume: 310 000 motors/month
  - Machine based assembling
  - Through process control & quality checks
- Technology Center
  - SANYO DENKI'S main product research and development facility
  - More than 300 Engineers
  - Since 1997

Acoustic radio wave anechoic chamber

Laboratories

Production line

Design rooms

## SANYO DENKI & R.T.A. STEPPING MOTORS OVERVIEW

- SANYO DENKI experience and skills collected in over 80 years of activity in the motion control sector and R.T.A.'S 30 years of activity are able to offer a wide range of motors characterized by high performances:
  - high quality and reliability
  - low acoustic noise
  - excellent thermal performance
  - very large stock of motors, always available in our warehouse

- *Le competenze di SANYO DENKI accumulate in oltre 80 anni di attività nel settore del motion control unite all'esperienza trentennale di R.T.A. hanno permesso di selezionare una vasta gamma di motori caratterizzati da alte prestazioni:*
  - *alta qualità ed affidabilità*
  - *bassa rumorosità acustica*
  - *ottima performance da un punto di vista termico*
  - *consistente stock di motori sempre disponibili a magazzino*

**□ 28mm** — **FLANGE SIZE** → **□ 106.4mm**

□ 28mm

□ 42mm

□ 50mm

□ 56mm

□ 60mm

∅ 85.8mm

□ 85.5mm

□ 106.4mm

**12.5 Ncm** — **HOLDING TORQUE** → **2460 Ncm**

## R.T.A. PRODUCT LINES: STEPPING MOTORS & STEPPING MOTORS WITH ENCODER

- STEPPING MOTORS
  - STANDARD, H & SH SERIES:
    Motors with flange size from 1.1"(NEMA 11) up to 4.2" (NEMA 42) with holding torque from 12.5 Ncm to 24.6 Nm.
  - SM SERIES:
    Motors with flange size 3.4"(NEMA 34), at high torque (from 3.6 Nm to 9.2 Nm).

- MOTORI PASSO PASSO
  - *SERIE H, SH & STANDARD:*
    *Motori con flangia da 1.1" (NEMA 11) fino a 4.2" (NEMA 42) con coppie di tenuta da 12.5 Ncm a 24.6 Nm.*
  - *SERIE SM:*
    *Motori con flangia 3.4"(NEMA 34), ad alta intensità di coppia (da 3.6 Nm a 9.2 Nm).*

- STEPPING MOTORS WITH ENCODER
  - Motors with flange size: 42, 56, 60 & 85.5 mm, holding torque from 0.5 Nm to 9.2 Nm.
  - Standard encoder resolution: 400 cycles per revolution (CPR). Also available upon request 500 & 1000 CPR.

- MOTORI PASSO PASSO CON ENCODER
  - *Motori con flangia: 42, 56, 60 & 85.5 mm, coppie erogabili da 0.5 Nm a 9.2 Nm.*
  - *Risoluzione standard encoder: 400 cicli/giro. Disponibile anche su richiesta con risoluzione da 500 & 1000 cicli/giro.*

## STANDARD, H & SH SERIES

- High performance in terms of torque and power.
- High torque/inertia ratios.
- Low acoustic noise.
- Limited vibrations generated by the motor body.
- Extremely performing thermal behaviour.
- Optimized constuction for a better exploitation of the advantages in terms of precision and noiselessness offered by microstepping drives.
- H and STANDARD stepping motors include: terminal box and IP55 protection degree models.

- *Elevate prestazioni in termini di coppia e di potenza.*
- *Elevati rapporti coppia/inerzia.*
- *Bassa rumorosità acustica.*
- *Limitate vibrazioni generate dal corpo motore.*
- *Ottime performance da un punto di vista termico.*
- *Costruzione ottimizzata per meglio sfruttare i vantaggi in termini di precisione e silenziosità offerti da azionamenti ad alto frazionamento di passo.*
- *Tra i nostri prodotti disponibili: modello con terminal box e grado di protezione IP55.*

## SM SERIES

- The best performance in terms of torque and power.
- Optimized for usage with drives with any type of power supply, also directly from the main (230 VAC).
- Insulation voltage 250 VAC.
- Class F insulation.
- Optimized thermal and acoustic efficiency.
- Shaft with 14 mm diameter: robust and able to bear high radial loads.
- UL and CSA marking.

- *Prestazioni ancora più elevate in termini di coppia e di potenza.*
- *Costruzione ottimizzata per l'utilizzo con qualsiasi tipo di alimentazione, anche diretta da rete (230 VAC).*
- *Tensione di isolamento 250 VAC.*
- *Classe di isolamento F.*
- *Rendimento termico ed acustico ulteriormente ottimizzato.*
- *Albero di diametro 14 mm in grado di sostenere elevati carichi radiali.*
- *Marcatura UL e CSA.*

## SPECIAL REQUIREMENTS & ACCESSORIES

IP65

- Versions in IP65 available
  *Versioni in IP65 disponibili*

BRAKE

- Versions with brake available
  *Versioni con freno disponibili*

- Gearboxes available
  *Riduttori disponibili*

(contact R.T.A. for more details / *contattare R.T.A per maggiori dettagli*)

## MOTORS WITH ENCODER OVERVIEW

- All based on SANYO DENKI stepping motors
- Flange size: 42, 56, 60 & 85.5 mm
- Holding torque: from 0.5 to 9.0 Nm
- Standard signal: DIFFERENTIAL (SINGLE-ENDED version available)
- High flexibility in coupling with R.T.A. drives
- All motors with encoder are mounted and tested by R.T.A., following rigorous standards in accordance with R.T.A. best practices developed over more than 30 years of activity.

- *Tutti gli encoder sono assemblati su motori passo passo SANYO DENKI*
- *Flangia: 42, 56, 60 & 85.5 mm*
- *Coppie erogabili: da 0.5 a 9.0 Nm*
- *Segnale di uscita: DIFFERENZIALE (Versione SINGLE-ENDED disponibile)*
- *Massima versatilità nell'accoppiamento a driver R.T.A.*
- *Tutti i motori con encoder sono montati e testati da R.T.A., seguendo rigorose norme in conformità con le migliori pratiche sviluppate da R.T.A. in più di 30 anni di attività.*

## ENCODER FEATURES

- Standard encoder resolution: 400 CPR (also available upon request 500 & 1000 CPR)
- Standard signal: DIFFERENTIAL (SINGLE-ENDED version available)
- INDEX versions available upon request

- *Risoluzione standard encoder: 400 cicli/giro (disponibili anche su richiesta 500 & 1000 cicli/giro)*
- *Segnale di uscita : DIFFERENZIALE (Versione SINGLE-ENDED disponibile)*
- *Disponibili su richiesta versioni con tacca di zero (INDEX)*

| H, SH, SM & STANDARD Series SANYO DENKI Stepping Motors | HOLDING TORQUE *COPPIA DI TENUTA* (Ncm.) | FLANGE SIZE *DIMENSIONI FLANGIA* (mm.) | LENGTH *LUNGHEZZA* (mm.) | CURRENT *CORRENTE* (Amp) | TECHNICAL DATA *DATI TECNICI* (page/pagina) | VERSION WITH ENCODER *VERSIONE CON ENCODER* |
|---|---|---|---|---|---|---|
| SIZE 1.1" - ☐ 28 mm. | | | | | | |
| SH2285-5271 | 14.5 | ☐ 28 | 51.5 | 0.70* | 12 | |
| SIZE 1.7" - ☐ 42 mm. | | | | | | |
| 103-546-55500 | 12.5 | ☐ 42 | 32.5 | 0.20 | 13 | |
| 103-546-5342 | 19 | ☐ 42 | 32.5 | 0.42* | 14 | |
| 103-547-52500 (103-547-52300) | 25 | ☐ 42 | 36.5 | 0.70* | 15 | |
| 103-H5208-0483 | 42 | ☐ 42 | 39.0 | 0.90* | 16 | |
| 103-H5210-4240 | 51 | ☐ 42 | 48.0 | 1.00 | 17 | |
| 103-H5210-4541 (103-H5210-4512) | 51 | ☐ 42 | 48.0 | 2.00 | 18 | ■ Pag.60 |
| SIZE 50 mm. - ☐ 50 mm. | | | | | | |
| 103-H6701-0140 (103-H6701-0113) | 38 | ☐ 50 | 39.8 | 0.70* | 19 | |
| 103-H6703-0440 | 68 | ☐ 50 | 51.3 | 1.40* | 20 | |
| SIZE 2.2" - ☐ 56 mm. | | | | | | |
| 103-H7121-0440 | 49 | ☐ 56 | 41.8 | 1.50* | 21 | |
| 103-H7123-0140 | 110 | ☐ 56 | 53.8 | 0.70* | 22 | |
| 103-H7123-0440 | 110 | ☐ 56 | 53.8 | 1.50 | 23 | |
| 103-H7123-5040 (103-H7123-5010) | 85 | ☐ 56 | 53.8 | 2.00 | 24 | |
| 103-H7123-0740 (103-H7123-0710) | 110 | ☐ 56 | 53.8 | 2.20* | 25 | |
| 103-H7123-1749 (103-H7123-1711) | 110 | ☐ 56 | 53.8 | 4.00 | 26 | ■ Pag.61 |
| 103-H7126-0140 | 165 | ☐ 56 | 75.8 | 0.75* | 27 | |
| 103-H7126-0740 (103-H7126-0710) | 165 | ☐ 56 | 75.8 | 2.20* | 28 | |
| 103-H7126-1740 (103-H7126-1710) | 165 | ☐ 56 | 75.8 | 4.00 | 29 | ■ Pag.62 |
| 103-H7126-6640 (103-H7126-6610) | 165 | ☐ 56 | 75.8 | 5.60 | 30 | |
| SIZE 60 mm. - ☐ 60 mm. | | | | | | |
| 103-H7823-0740 | 300 | ☐ 60 | 85.8 | 2.20* | 31 | |
| 103-H7823-1740 (103-H7823-1714) | 300 | ☐ 60 | 85.8 | 4.00 | 32 | ■ Pag.63 |
| SIZE 3.4" - Ø 85.8 mm. | | | | | | |
| 103-845-6741 (103-845-6711) | 510 | Ø 85.8 | 130.0 | 9.50 | 33 | |
| 103-845-67S1 | 510 | Ø 85.8 | 133.0 | 9.50 | 34 | |
| 103-845-67S41 | 510 | Ø 85.8 | 153.0 | 9.50 | 35 | |
| 103-H8221-6241 (103-H8221-6211) | 300 | Ø 85.8 | 62.0 | 6.00 | 36 | |
| 103-H8221-62S41 | 300 | Ø 85.8 | 82.9 | 6.00 | 37 | |
| 103-H8222-6340 (103-H8222-6310) | 560 | Ø 85.8 | 92.2 | 6.00 | 38 | |
| 103-H8223-6540 (103-H8223-6510) | 790 | Ø 85.8 | 125.9 | 9.00 | 39 | |
| SIZE 3.4" - ☐ 85.5 mm. | | | | | | |
| SM 2861-5055 (SM 2861-5025) | 360 | ☐ 85.5 | 66.0 | 2.00 | 40 | ■ Pag.67 |
| SM 2861-5255 (SM 2861-5225) | 360 | ☐ 85.5 | 66.0 | 6.00 | 41 | ■ Pag.64 |
| SM 2862-5055 | 700 | ☐ 85.5 | 96.5 | 2.00 | 42 | |
| SM 2862-5155 (SM 2862-5125) | 700 | ☐ 85.5 | 96.5 | 4.00 | 43 | ■ Pag.68 |
| SM 2862-5156 | 700 | ☐ 85.5 | 128.4 | 4.00 | 44 | |
| SM 2862-5255 (SM 2862-5225) | 700 | ☐ 85.5 | 96.5 | 6.00 | 45 | ■ Pag.65 |
| SM 2863-5155 (SM 2863-5126) | 920 | ☐ 85.5 | 127.0 | 4.00 | 46 | ■ Pag.69 |
| SM 2863-5255 (SM 2863-5225) | 920 | ☐ 85.5 | 127.0 | 6.00 | 47 | ■ Pag.66 |
| SIZE 4.2" - ☐ 106.4 mm. | | | | | | |
| 103-8932-6451 (103-8932-6421) | 1330 | ☐ 106.4 | 186.9 | 12.70 | 48 | |
| 103-8960-6551 | 2060 | ☐ 106.4 | 245.0 | 14.10 | 49 | |
| 103-H89222-6341 (103-H89222-6311) | 1620 | ☐ 106.4 | 163.0 | 6.00 | 50 | |
| 103-H89222-6541 | 1620 | ☐ 106.4 | 163.0 | 10.00 | 51 | |
| 103-H89223-6341 (103-H89223-6311) | 2460 | ☐ 106.4 | 221.0 | 6.00 | 52 | |
| 103-H89223-6641 (103-H89223-6611) | 2460 | ☐ 106.4 | 221.0 | 12.00 | 53 | |

NOTE: Codes between brackets refer to double shaft models.
*NOTA: i codici tra parentesi si riferiscono ai modelli bialbero.*

*Bipolar series connection.
**Collegamento bipolare serie.*

## SUGGESTED MOTOR/DRIVE COUPLING

- The following tables show suggested motor/drive coupling between SANYO DENKI stepping motors and R.T.A. Drives.
- R.T.A. suggests contacting its commercial personnel to verify and validate the optimal motor / drive coupling.
- PLUS E, PLUS L, PLUS ET and X-PLUS ET series drives require coupling with R.T.A. EM series motors. Ask R.T.A. for details.
- The motors with a lower current than that provided by our drives, are not present in the following table.

- *Nelle tabelle seguenti sono indicati gli accoppiamenti motore/serie di azionamenti consigliati da R.T.A.*
- *R.T.A. consiglia di contattare il proprio personale commerciale per verificare e validare l'ottimale accoppiamento fra motore e azionamento.*
- *Gli azionamenti serie PLUS E, PLUS L, PLUS ET e X-PLUS ET prevedono l'accoppiamento con motori serie EM. Contattare R.T.A. per ulteriori dettagli.*
- *I motori che hanno una corrente inferiore a quella contemplata dai nostri azionamenti, non sono presenti nella tabella sottostante.*

| H, SH, SM & STANDARD Series SANYO DENKI Stepping Motors<br>*Motori passo-passo SANYO DENKI serie H, SH, SM e Standard* | R.T.A. Drives / *Azionamenti R.T.A.** | | | | | | | | | | | | | |
|---|---|---|---|---|---|---|---|---|---|---|---|---|---|---|
| | BSD | CSD | CSD J | A-CSD | NDC | A-NDC | ADW | HGD | PLUS A/B | PLUS K | PLUS J | X-PLUS B | X-MIND B | X-MIND K |
| SIZE 1.1" - ☐ 28 mm. | | | | | | | | | | | | | | |
| SH2285-5271 | ■ | ■ | | ■ | ■ | ■ | | ■ | | | | | | |
| SIZE 1.7" - ☐ 42 mm. | | | | | | | | | | | | | | |
| 103-H5208-0483 | ■ | ■ | | ■ | ■ | ■ | | ■ | | | | | | |
| 103-H5210-4240 | ■ | ■ | | ■ | ■ | ■ | ■ | ■ | | | | | | |
| 103-H5210-4541 (103-H5210-4512) | ■ | ■ | | ■ | ■ | ■ | | ■ | | | | | | |
| SIZE 50 mm. - ☐ 50 mm. | | | | | | | | | | | | | | |
| 103-H6701-0140 (103-H6701-0113) | ■ | ■ | | ■ | ■ | ■ | | ■ | | | | | | |
| 103-H6703-0440 | ■ | ■ | | ■ | ■ | ■ | | ■ | | | | | | |
| SIZE 2.2" - ☐ 56 mm. | | | | | | | | | | | | | | |
| 103-H7121-0440 | ■ | ■ | | ■ | ■ | ■ | | ■ | | | | | | |
| 103-H7123-0140 | ■ | ■ | | ■ | ■ | ■ | | ■ | | | | | | |
| 103-H7123-0440 | ■ | ■ | | ■ | ■ | ■ | | ■ | | | | | | |
| 103-H7123-5040 (103-H7123-5010) | ■ | ■ | | ■ | ■ | ■ | | ■ | | | | | | |
| 103-H7123-0740 (103-H7123-0710) | ■ | ■ | | ■ | ■ | ■ | ■ | ■ | | | | | | |
| 103-H7123-1749 (103-H7123-1711) | | ■ | ■ | ■ | ■ | ■ | ■ | ■ | ■ | ■ | ■ | | | |
| 103-H7126-0140 | ■ | ■ | | ■ | ■ | ■ | | ■ | | | | | | |
| 103-H7126-0740 (103-H7126-0710) | ■ | ■ | | ■ | ■ | ■ | ■ | ■ | | | | | | |
| 103-H7126-1740 (103-H7126-1710) | | ■ | ■ | ■ | ■ | ■ | ■ | ■ | ■ | ■ | ■ | | | |
| 103-H7126-6640 (103-H7126-6610) | | | | | ■ | ■ | ■ | ■ | ■ | ■ | ■ | | | |
| SIZE 60 mm. - ☐ 60 mm. | | | | | | | | | | | | | | |
| 103-H7823-0740 | ■ | | | | | | ■ | | | | | | | |
| 103-H7823-1740 (103-H7823-1714) | | ■ | ■ | ■ | ■ | ■ | ■ | ■ | ■ | ■ | ■ | | | |
| SIZE 3.4" - Ø 85.8 mm. | | | | | | | | | | | | | | |
| 103-845-6741 (103-845-6711) | | | | | | | | | ■ | ■ | | | | |
| 103-845-67S1 | | | | | | | | | ■ | ■ | | | | |
| 103-845-67S41 | | | | | | | | | ■ | ■ | | | | |
| 103-H8221-6241 (103-H8221-6211) | | | | | ■ | ■ | | ■ | ■ | ■ | ■ | | | |
| 103-H8221-62S41 | | | | | ■ | ■ | | ■ | ■ | ■ | ■ | | | |
| 103-H8222-6340 (103-H8222-6310) | | | | | ■ | ■ | | ■ | ■ | ■ | ■ | | | |
| 103-H8223-6540 (103-H8223-6510) | | | | | | | | | ■ | ■ | | | | |
| SIZE 3.4" - ☐ 85.5 mm. | | | | | | | | | | | | | | |
| SM 2861-5055 (SM 2861-5025) | | | | | | | | | | | | ■ | ■ | ■ |
| SM 2861-5255 (SM 2861-5225) | | | | | ■ | ■ | ■ | ■ | ■ | ■ | ■ | | | |
| SM 2862-5055 | | | | | | | | | | | | ■ | ■ | ■ |
| SM 2862-5155 (SM 2862-5125) | | | | | | | | | | | | ■ | ■ | ■ |
| SM 2862-5156 | | | | | | | | | | | | ■ | ■ | ■ |
| SM 2862-5255 (SM 2862-5225) | | | | | ■ | ■ | ■ | ■ | ■ | ■ | ■ | | | |
| SM 2863-5155 (SM 2863-5126) | | | | | | | | | | | | ■ | ■ | ■ |
| SM 2863-5255 (SM 2863-5225) | | | | | ■ | ■ | ■ | ■ | ■ | ■ | ■ | | | |
| SIZE 4.2" - ☐ 106.4 mm. | | | | | | | | | | | | | | |
| 103-H89222-6341 (103-H89222-6311) | | | | | | | | | ■ | ■ | ■ | | ■ | ■ |
| 103-H89223-6341 (103-H89223-6311) | | | | | | | | | ■ | ■ | ■ | | ■ | ■ |

NOTE: Codes between brackets refer to double shaft models.
*NOTA: i codici tra parentesi si riferiscono ai modelli bialbero.*

*For more info, please refer to www.rta.it
**Per ulteriori informazioni, si veda www.rta.it*

SANYO DENKI
SANMOTION

# Stepping motors

# SH2285-5271

SANYO DENKI
SANMOTION

## Dimensions (Unit:mm)

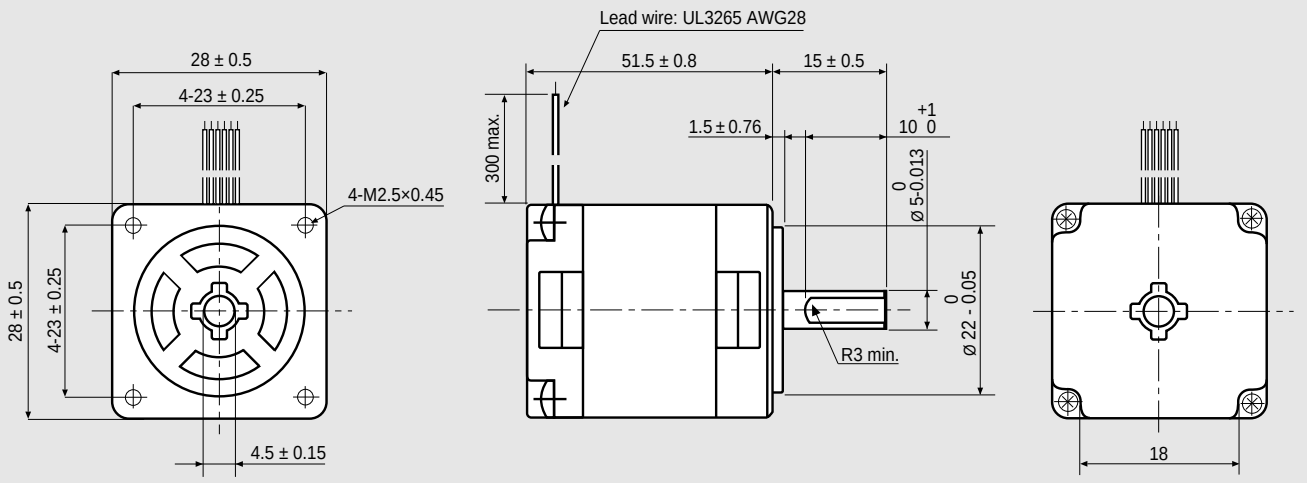


## FEATURES

| MODEL | | SH2285-5271 |
|---|---|---|
| BASIC STEP ANGLE | | 1.8° ± 0.09° |
| BIPOLAR CURRENT | (Amp) | 0.7(*) |
| UNIPOLAR CURRENT | (Amp) | 1.0 |
| RESISTANCE | (Ohm) | 4.1 |
| INDUCTANCE | (mH) | 1.9 |
| BIPOLAR HOLDING TORQUE | (Ncm) | 14.5 |
| UNIPOLAR HOLDING TORQUE | (Ncm) | 11.5 |
| ROTOR INERTIA | (Kgm $^2$ x 10 $^{-7}$) | 22 |
| THEORETICAL ACCELERATION | (rad x sec.$^{-2}$) | 66000 |
| BACK E.M.F. | (V/Krpm) | 15 |
| MASS | (Kg) | 0.2 |
| | | |
| LEADS CODE | | IV |

## TORQUE/SPEED CURVE

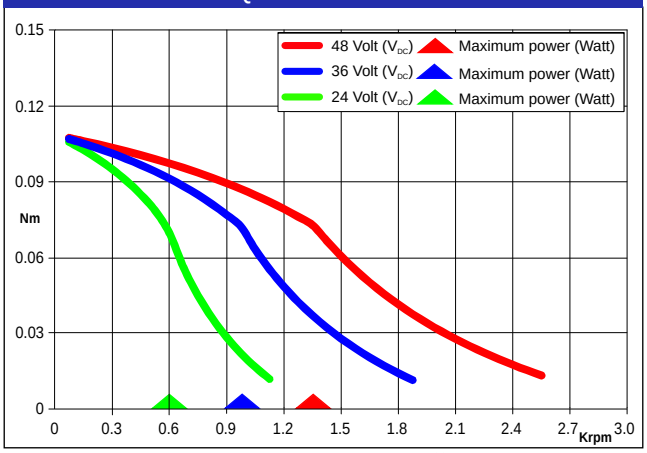


(*)Bipolar series connection.
(*)*Collegamento bipolare serie.*

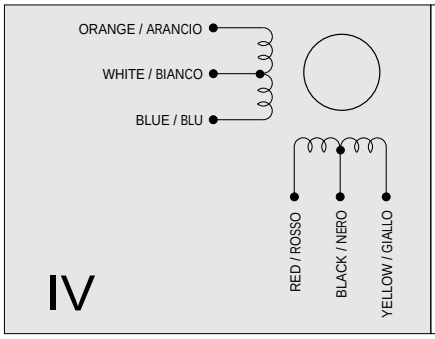

Suggested R.T.A. driver: BSD Series, CSD/A-CSD Series, NDC/A-NDC Series, HGD Series.

R.T.A. s.r.l. PAVIA (ITALY) SANYO DENKI CO.,Ltd (JAPAN)

# 103-546-55500

SANYO DENKI
SANMOTION

## Dimensions (Unit:mm)

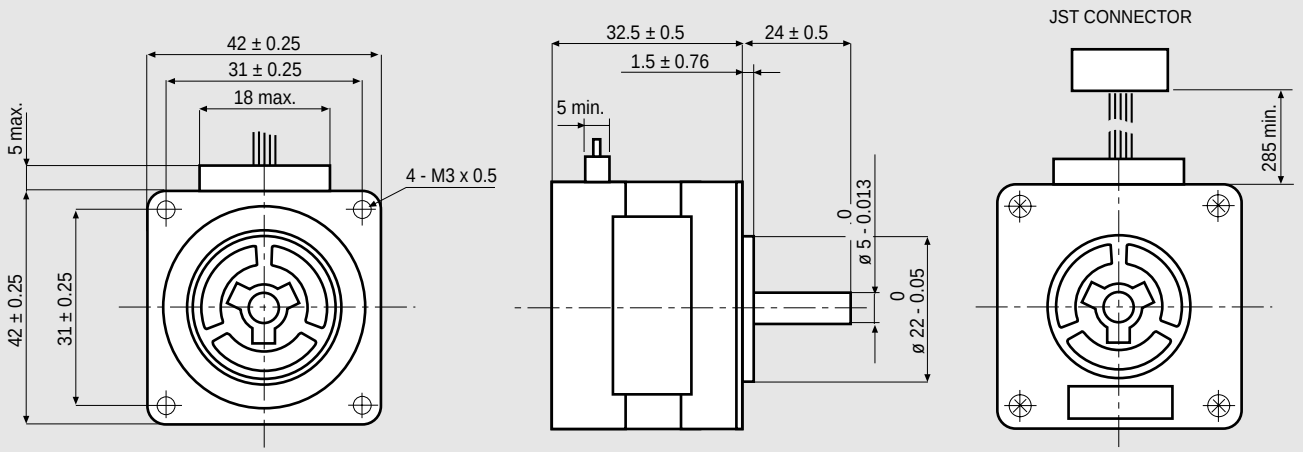


MOTOR CONNECTOR IS JST mod. EHR-4A/ EHR-6 at 4 / 6 POLES FEMALE.
FOR CONNECTION USE JST mod. B4B-EH-A/ B6B-EH-A MALE CONNECTOR.

## FEATURES

| MODEL | | 103-546-55500 |
|---|---|---|
| BASIC STEP ANGLE | | 1.8° ± 0.09° |
| BIPOLAR CURRENT | (Amp) | 0.2 |
| UNIPOLAR CURRENT | (Amp) | |
| RESISTANCE | (Ohm) | 37.5 |
| INDUCTANCE | (mH) | 52 |
| BIPOLAR HOLDING TORQUE | (Ncm) | 12.5 |
| UNIPOLAR HOLDING TORQUE | (Ncm) | |
| ROTOR INERTIA | (Kgm $^2$ x 10 $^{-7}$) | 20 |
| THEORETICAL ACCELERATION | (rad x sec.$^{-2}$) | 63000 |
| BACK E.M.F. | (V/Krpm) | 47 |
| MASS | (Kg) | 0.2 |
| | | |
| LEADS CODE | | V |

## TORQUE/SPEED CURVE

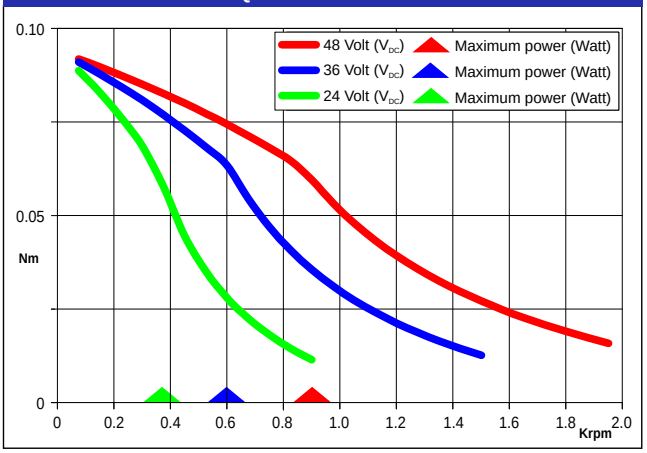


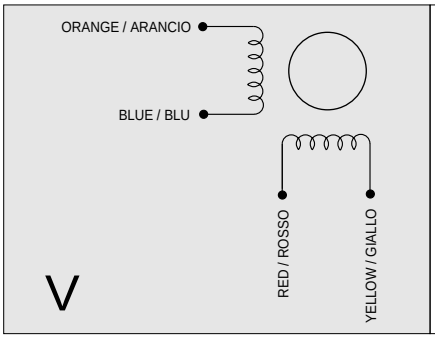


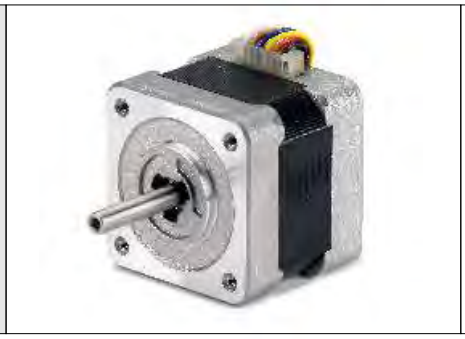

## Suggested driver: contact R.T.A.

R.T.A. s.r.l. PAVIA (ITALY) SANYO DENKI CO.,Ltd (JAPAN)

# 103-546-5342

SANYO DENKI
SANMOTION

## Dimensions (Unit:mm)

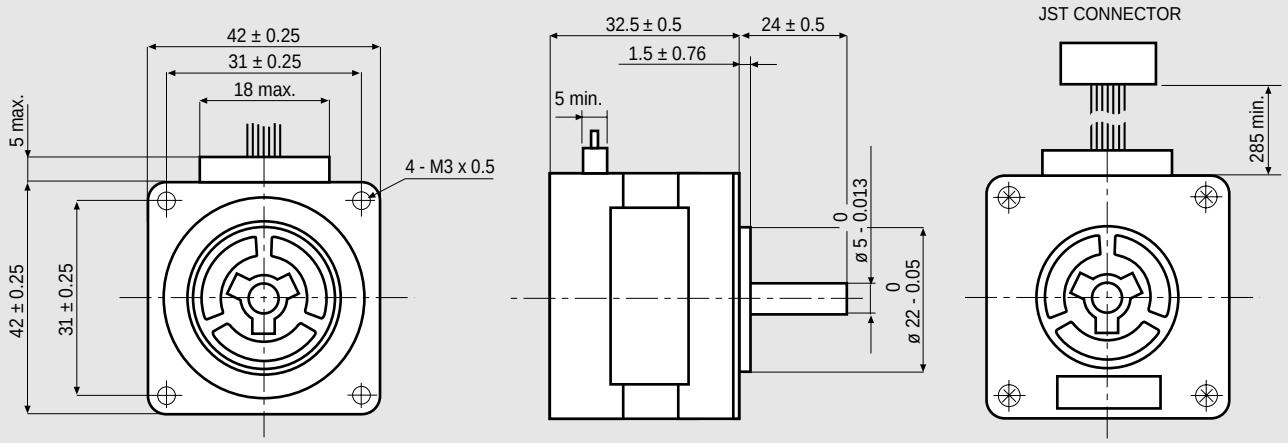


MOTOR CONNECTOR IS JST mod. EHR-4A/ EHR-6 at 4 / 6 POLES FEMALE.
FOR CONNECTION USE JST mod. B4B-EH-A/ B6B-EH-A MALE CONNECTOR.

## FEATURES

| MODEL | | 103-546-5342 |
|---|---|---|
| BASIC STEP ANGLE | | 1.8° ± 0.09° |
| BIPOLAR CURRENT | (Amp) | 0.42 (*) |
| UNIPOLAR CURRENT | (Amp) | 0.6 |
| RESISTANCE | (Ohm) | 6.7 |
| INDUCTANCE | (mH) | 5.4 |
| BIPOLAR HOLDING TORQUE | (Ncm) | 19 |
| UNIPOLAR HOLDING TORQUE | (Ncm) | 14.5 |
| ROTOR INERTIA | (Kgm $^2$ x 10 $^{-7}$) | 30 |
| THEORETICAL ACCELERATION | (rad x sec.$^{-2}$) | 63000 |
| BACK E.M.F. | (V/Krpm) | 18 |
| MASS | (Kg) | 0.2 |
| | | |
| LEADS CODE | | IV |

## TORQUE/SPEED CURVE

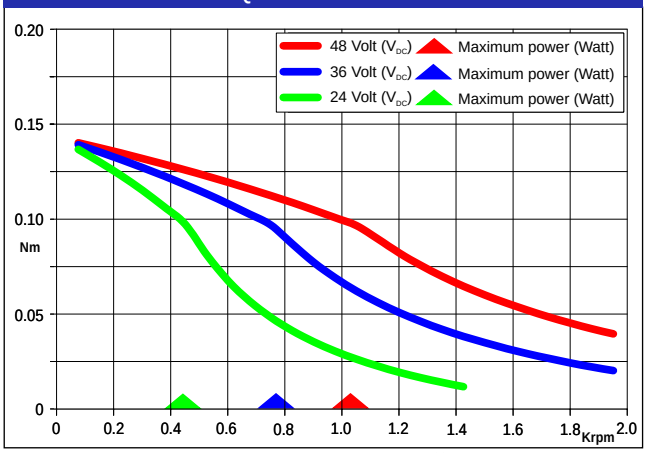


(*)Bipolar series connection.
(*)*Collegamento bipolare serie.*

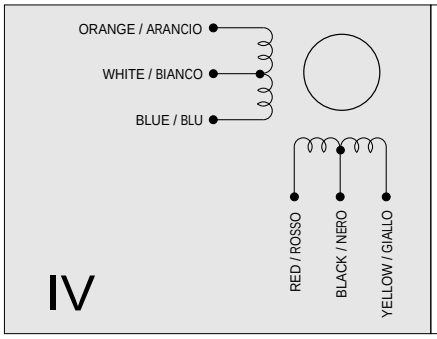


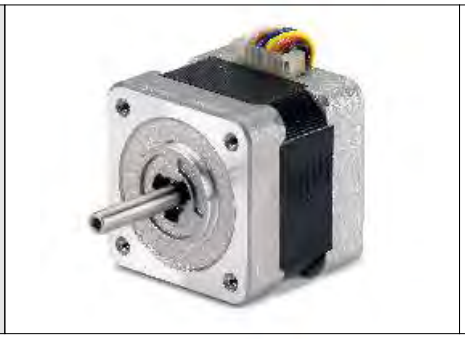

## Suggested driver: contact R.T.A.

R.T.A. s.r.l. PAVIA (ITALY) SANYO DENKI CO.,Ltd (JAPAN)

# 103-547-52500

SANYO DENKI
SANMOTION

## Dimensions (Unit:mm)

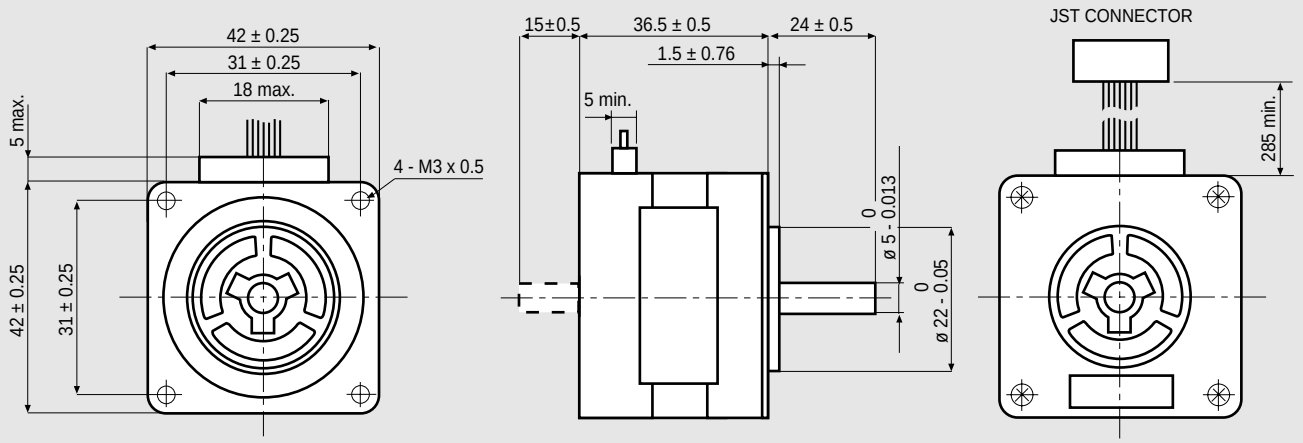


MOTOR CONNECTOR IS JST mod. EHR-4A/ EHR-6 at 4 / 6 POLES FEMALE.
FOR CONNECTION USE JST mod. B4B-EH-A/ B6B-EH-A MALE CONNECTOR.

## FEATURES

| MODEL | | 103-547-52500 (103-547-52300) |
|---|---|---|
| BASIC STEP ANGLE | | 1.8° ± 0.09° |
| BIPOLAR CURRENT | (Amp) | 0.7 (*) |
| UNIPOLAR CURRENT | (Amp) | 1.0 |
| RESISTANCE | (Ohm) | 3.15 |
| INDUCTANCE | (mH) | 3 |
| BIPOLAR HOLDING TORQUE | (Ncm) | 25 |
| UNIPOLAR HOLDING TORQUE | (Ncm) | 19 |
| ROTOR INERTIA | (Kgm $^2$ x 10 $^{-7}$) | 43 |
| THEORETICAL ACCELERATION | (rad x sec.$^{-2}$) | 59000 |
| BACK E.M.F. | (V/Krpm) | 14 |
| MASS | (Kg) | 0.24 |
| | | |
| LEADS CODE | | IV |

Codes between brackets refer to double shaft models.
*Le sigle fra parentesi si riferiscono ai modelli bialbero.*

## TORQUE/SPEED CURVE

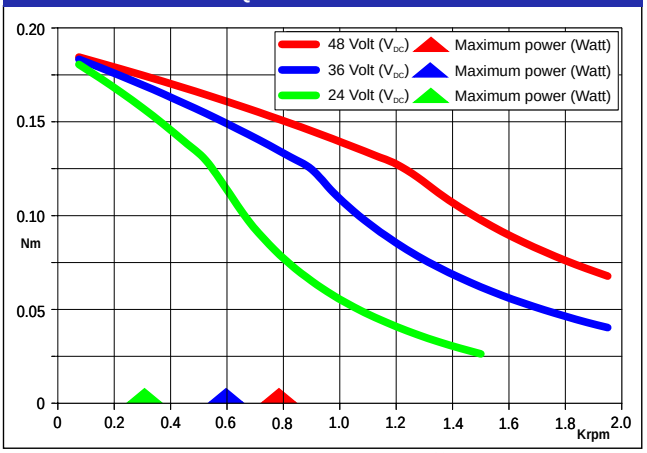


(*)Bipolar series connection.
*(*)Collegamento bipolare serie.*

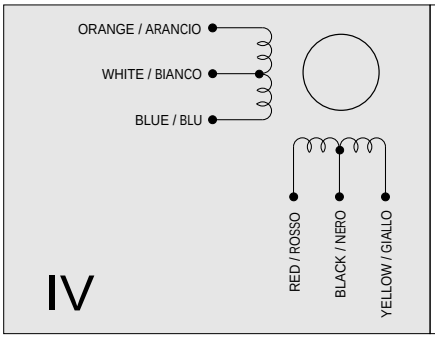


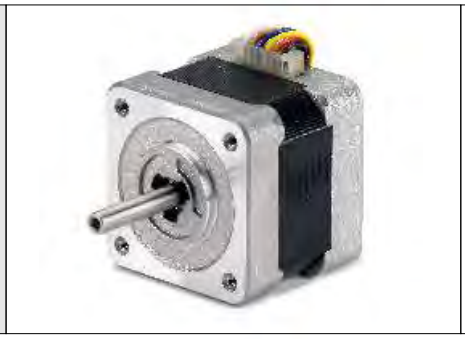

## Suggested driver: contact R.T.A.

R.T.A. s.r.l. PAVIA (ITALY) SANYO DENKI CO.,Ltd (JAPAN)

# 103-H5208-0483

SANYO DENKI
SANMOTION

## Dimensions (Unit:mm)

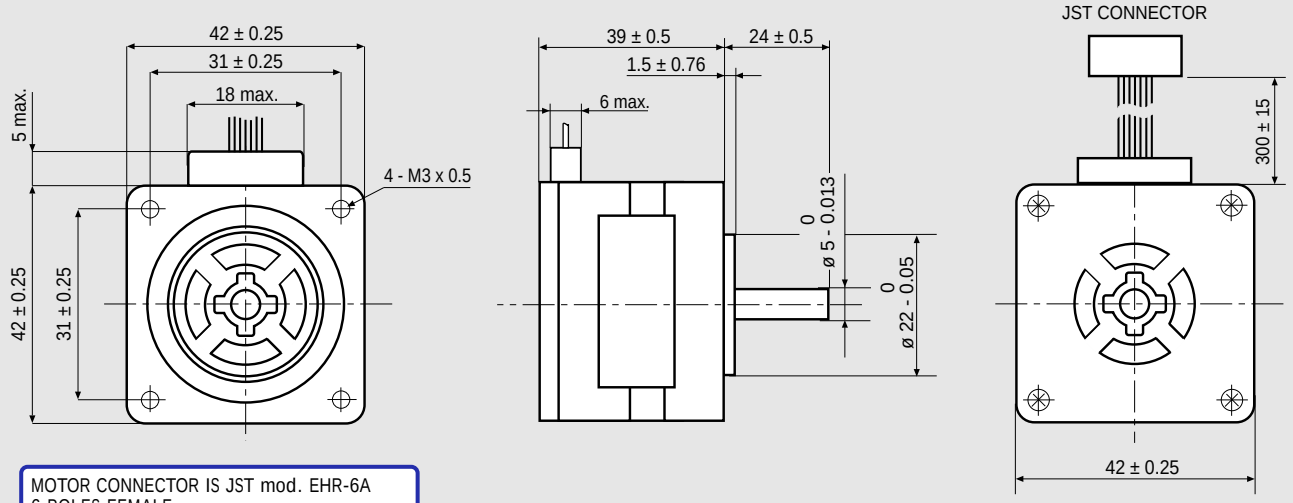


MOTOR CONNECTOR IS JST mod. EHR-6A
6 POLES FEMALE.
FOR CONNECTION USE JST
mod. B6B-EH-A MALE CONNECTOR.

## FEATURES

| MODEL | | 103-H5208-0483 |
|---|---|---|
| BASIC STEP ANGLE | | 1.8° ± 0.09° |
| BIPOLAR CURRENT | (Amp) | 0.9(*) |
| UNIPOLAR CURRENT | (Amp) | 1.2 |
| RESISTANCE | (Ohm) | 2.9 |
| INDUCTANCE | (mH) | 3.4 |
| BIPOLAR HOLDING TORQUE | (Ncm) | 42 |
| UNIPOLAR HOLDING TORQUE | (Ncm) | 30 |
| ROTOR INERTIA | (Kgm $^2$ x 10 $^{-7}$) | 56 |
| THEORETICAL ACCELERATION | (rad x sec.$^{-2}$) | 71000 |
| BACK E.M.F. | (V/Krpm) | 19 |
| MASS | (Kg) | 0.27 |
| | | |
| LEADS CODE | | IV |

## TORQUE/SPEED CURVE

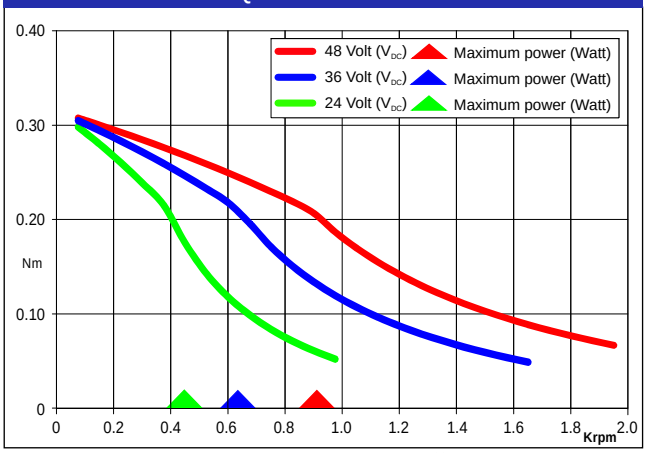


(*)Bipolar series connection.
(*)*Collegamento bipolare serie.*

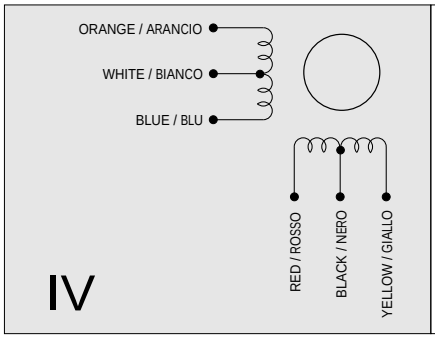

Suggested R.T.A. driver: BSD Series, CSD/A-CSD Series, NDC/A-NDC Series, HGD Series.

R.T.A. s.r.l. PAVIA (ITALY) SANYO DENKI CO.,Ltd (JAPAN)

# 103-H5210-4240

SANYO DENKI
SANMOTION

## Dimensions (Unit:mm)

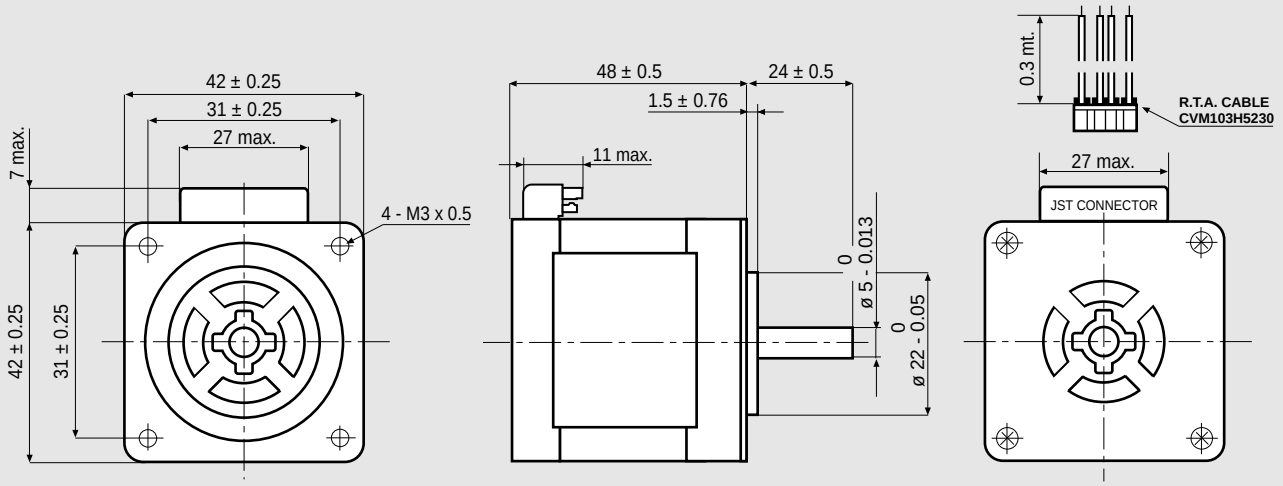


MOTOR CONNECTOR IS JST mod. B6B-EH K 6 POLES MALE.
FOR CONNECTION USE JST mod. EHR-6 FEMALE CONNECTOR AND mod. SEH-001 T-P0.6 CONTACTS.
NOTE: 103-H5210-4240 MOTORS NEED CVM103H5230 R.T.A. CABLES.
CONTACT R.T.A. FOR FURTHER DETAILS.

## FEATURES

| MODEL | | 103-H5210-4240 |
|---|---|---|
| BASIC STEP ANGLE | | 1.8° ± 0.09° |
| BIPOLAR CURRENT | (Amp) | 1.0 |
| UNIPOLAR CURRENT | (Amp) | |
| RESISTANCE | (Ohm) | 4.8 |
| INDUCTANCE | (mH) | 9.5 |
| BIPOLAR HOLDING TORQUE | (Ncm) | 51 |
| UNIPOLAR HOLDING TORQUE | (Ncm) | |
| ROTOR INERTIA | (Kgm $^2$ x 10 $^{-7}$) | 74 |
| THEORETICAL ACCELERATION | (rad x sec.$^{-2}$) | 69000 |
| BACK E.M.F. | (V/Krpm) | 14 |
| MASS | (Kg) | 0.35 |
| | | |
| LEADS CODE | | V |

## TORQUE/SPEED CURVE

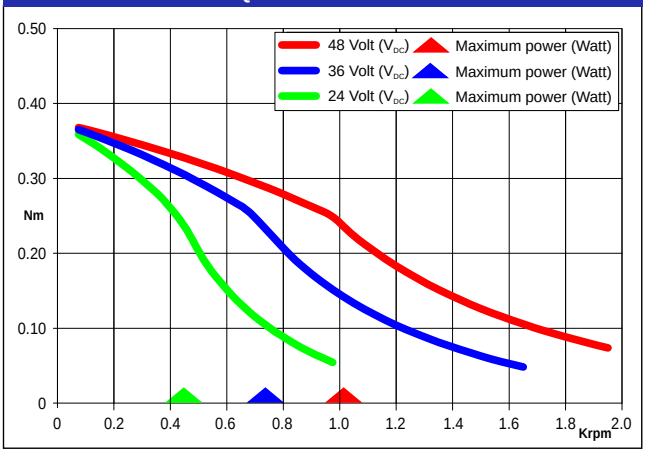


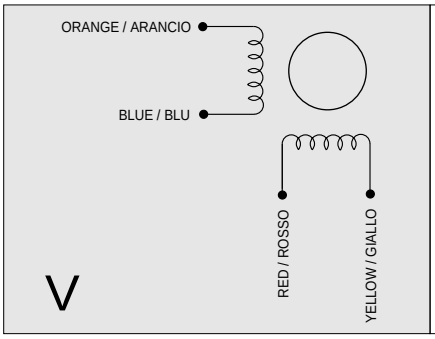

Suggested R.T.A. driver: BSD Series, CSD/A-CSD Series, NDC/A-NDC Series, ADW Series, HGD Series.




R.T.A. s.r.l. PAVIA (ITALY) SANYO DENKI CO.,Ltd (JAPAN)

# 103-H5210-4541

SANYO DENKI
SANMOTION

## Dimensions (Unit:mm)

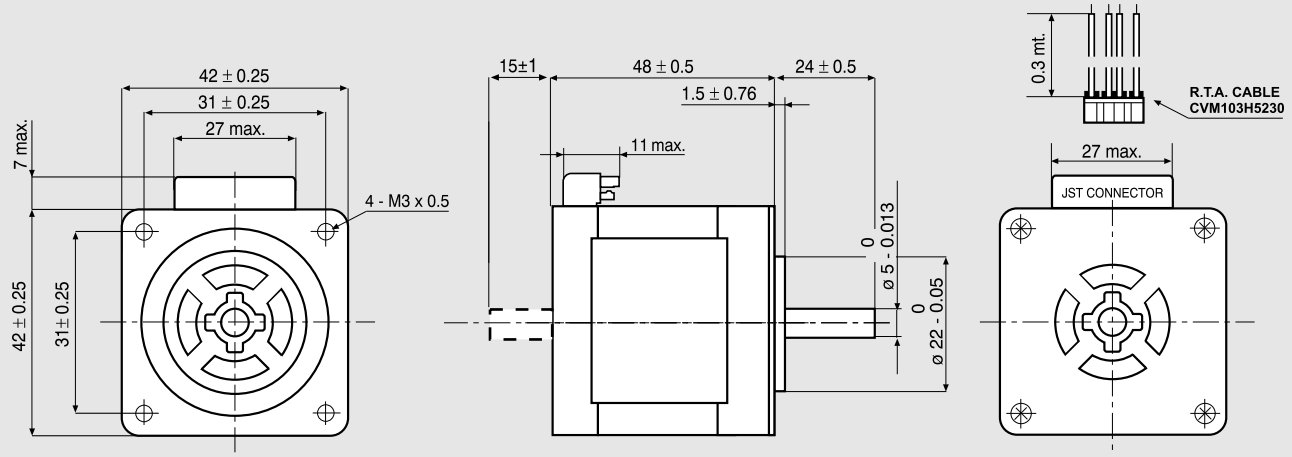


MOTOR CONNECTOR IS JST mod. B6B-EH K 6 POLES MALE.
FOR CONNECTION USE JST mod. EHR-6 FEMALE CONNECTOR AND mod. SEH-001 T-P0.6 CONTACTS.
**NOTE:** 103-H5210-4541/4512 MOTORS NEED CVM103H5230 R.T.A. CABLES. CONTACT R.T.A. FOR FURTHER DETAILS.

## FEATURES

| MODEL | | 103-H5210-4541 (103-H5210-4512) |
|---|---|---|
| BASIC STEP ANGLE | | 1.8° ± 0.09° |
| BIPOLAR CURRENT | (Amp) | 2.0 |
| UNIPOLAR CURRENT | (Amp) | |
| RESISTANCE | (Ohm) | 1.25 |
| INDUCTANCE | (mH) | 2.4 |
| BIPOLAR HOLDING TORQUE | (Ncm) | 51 |
| UNIPOLAR HOLDING TORQUE | (Ncm) | |
| ROTOR INERTIA | (Kgm $^2$ x 10 $^{-7}$) | 74 |
| THEORETICAL ACCELERATION | (rad x sec.$^{-2}$) | 69000 |
| BACK E.M.F. | (V/Krpm) | 25 |
| MASS | (Kg) | 0.35 |
| | | |
| LEADS CODE | | V |

Codes between brackets refer to double shaft models.
*Le sigle fra parentesi si riferiscono ai modelli bialbero.*

## TORQUE/SPEED CURVE

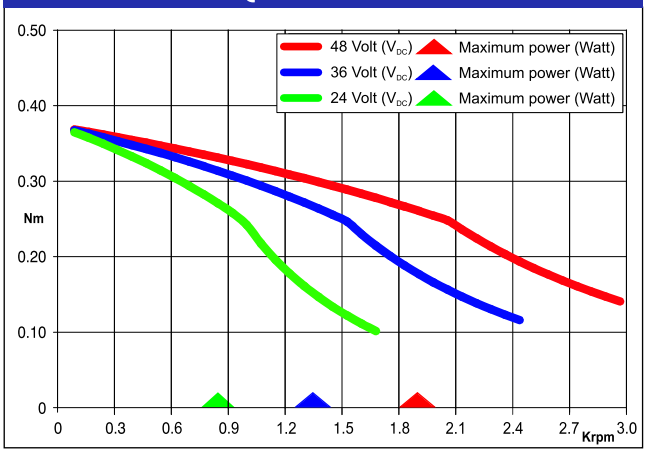


R.T.A. s.r.l. PAVIA (ITALY) SANYO DENKI CO.,Ltd (JAPAN)

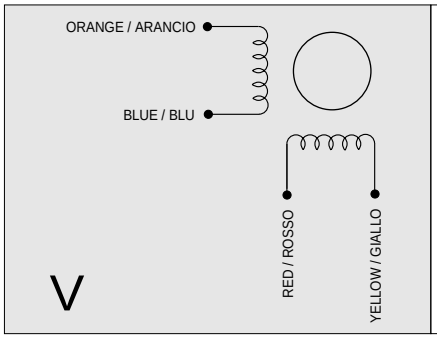

Suggested R.T.A. driver: BSD Series, CSD/A-CSD Series, NDC/A-NDC Series, HGD Series.

# 103-H6701-0140

SANYO DENKI
SANMOTION

## Dimensions (Unit:mm)

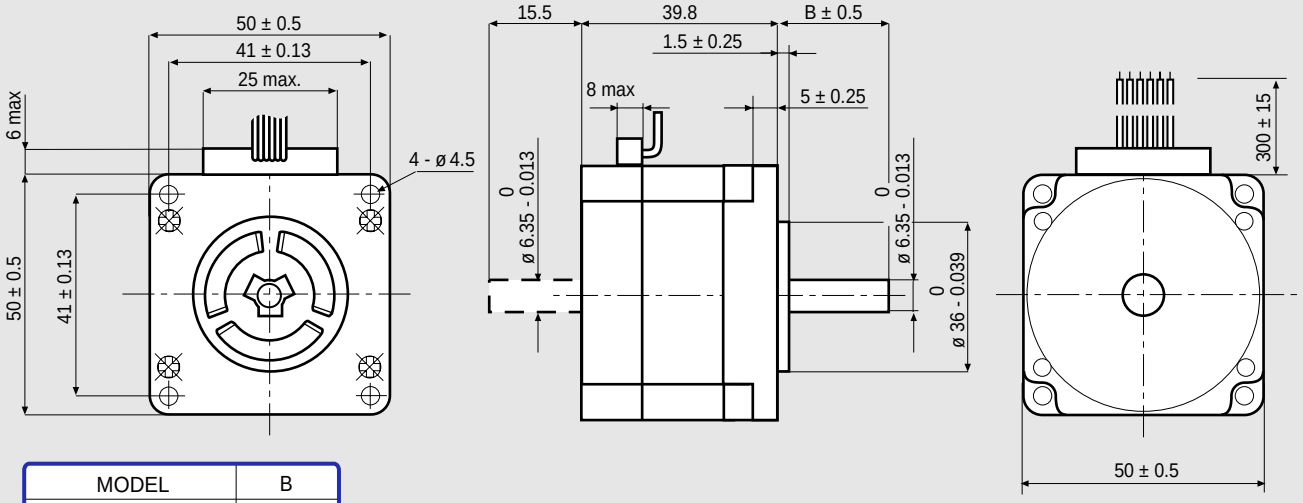


| MODEL | B |
|---|---|
| 103 - H6701 - 0140 | 20.6 |
| 103 - H6701 - 0113 | 28 |

## FEATURES

| MODEL | | 103-H6701-0140 (103-H6701-0113) |
|---|---|---|
| BASIC STEP ANGLE | | 1.8° ± 0.09° |
| BIPOLAR CURRENT | (Amp) | 0.7 (*) |
| UNIPOLAR CURRENT | (Amp) | 1.0 |
| RESISTANCE | (Ohm) | 4.3 |
| INDUCTANCE | (mH) | 6.8 |
| BIPOLAR HOLDING TORQUE | (Ncm) | 38 |
| UNIPOLAR HOLDING TORQUE | (Ncm) | 28 |
| ROTOR INERTIA | (Kgm $^2$ x 10 $^{-7}$) | 57 |
| THEORETICAL ACCELERATION | (rad x sec.$^{-2}$) | 66000 |
| BACK E.M.F. | (V/Krpm) | 20 |
| MASS | (Kg) | 0.35 |
| | | |
| LEADS CODE | | IV |

Codes between brackets refer to double shaft models.
*Le sigle fra parentesi si riferiscono ai modelli bialbero.*

## TORQUE/SPEED CURVE

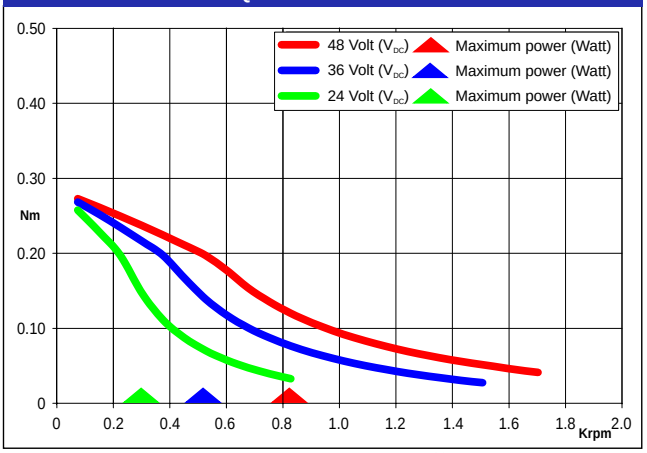


(*)Bipolar series connection.
(*)*Collegamento bipolare serie.*

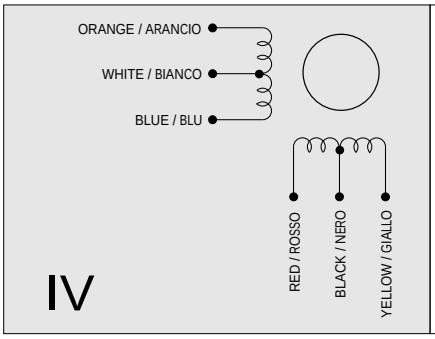

## Suggested R.T.A. driver: BSD Series, CSD/A-CSD Series, NDC/A-NDC Series, HGD Series.




R.T.A. s.r.l. PAVIA (ITALY) SANYO DENKI CO.,Ltd (JAPAN)

# 103-H6703-0440

SANYO DENKI
SANMOTION

## Dimensions (Unit:mm)

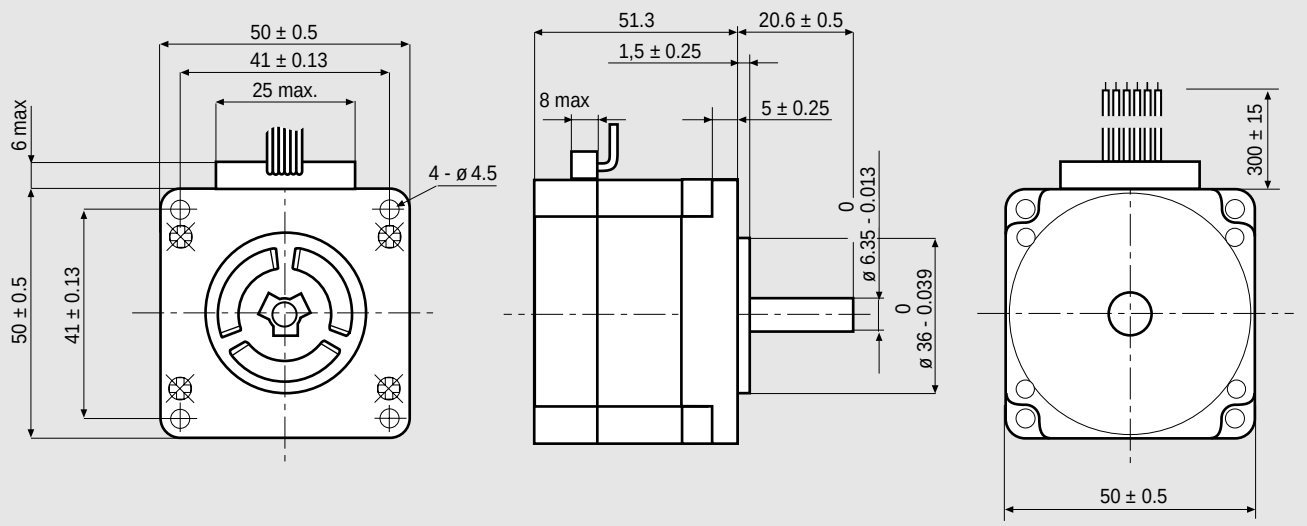


## FEATURES

| MODEL | | 103-H6703-0440 |
|---|---|---|
| BASIC STEP ANGLE | | 1.8° ± 0.09° |
| BIPOLAR CURRENT | (Amp) | 1.4(*) |
| UNIPOLAR CURRENT | (Amp) | 2.0 |
| RESISTANCE | (Ohm) | 1.6 |
| INDUCTANCE | (mH) | 3.2 |
| BIPOLAR HOLDING TORQUE | (Ncm) | 68 |
| UNIPOLAR HOLDING TORQUE | (Ncm) | 49 |
| ROTOR INERTIA | (Kgm $^2$ x 10 $^{-7}$) | 118 |
| THEORETICAL ACCELERATION | (rad x sec.$^{-2}$) | 58000 |
| BACK E.M.F. | (V/Krpm) | 17.5 |
| MASS | (Kg) | 0.5 |
| | | |
| LEADS CODE | | IV |

## TORQUE/SPEED CURVE

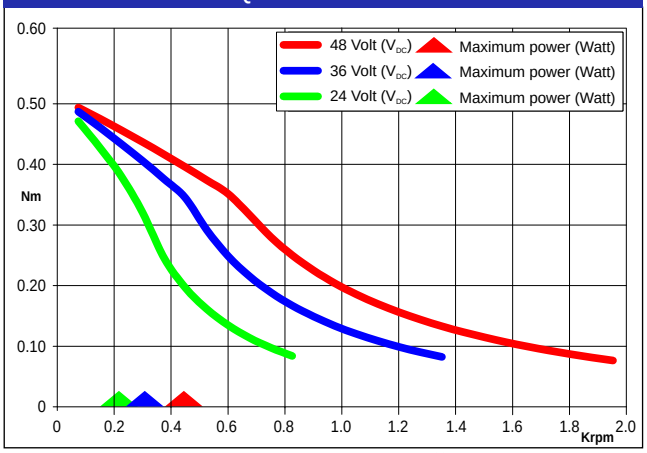


(*)Bipolar series connection.
(*)*Collegamento bipolare serie.*

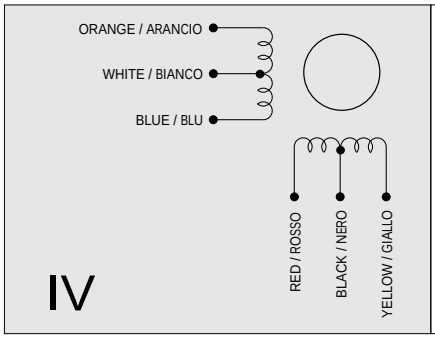

Suggested R.T.A. driver: BSD Series, CSD/A-CSD Series, NDC/A-NDC Series, HGD Series.

R.T.A. s.r.l. PAVIA (ITALY) SANYO DENKI CO.,Ltd (JAPAN)

# 103-H7121-0440

SANYO DENKI
SANMOTION

## Dimensions (Unit:mm)

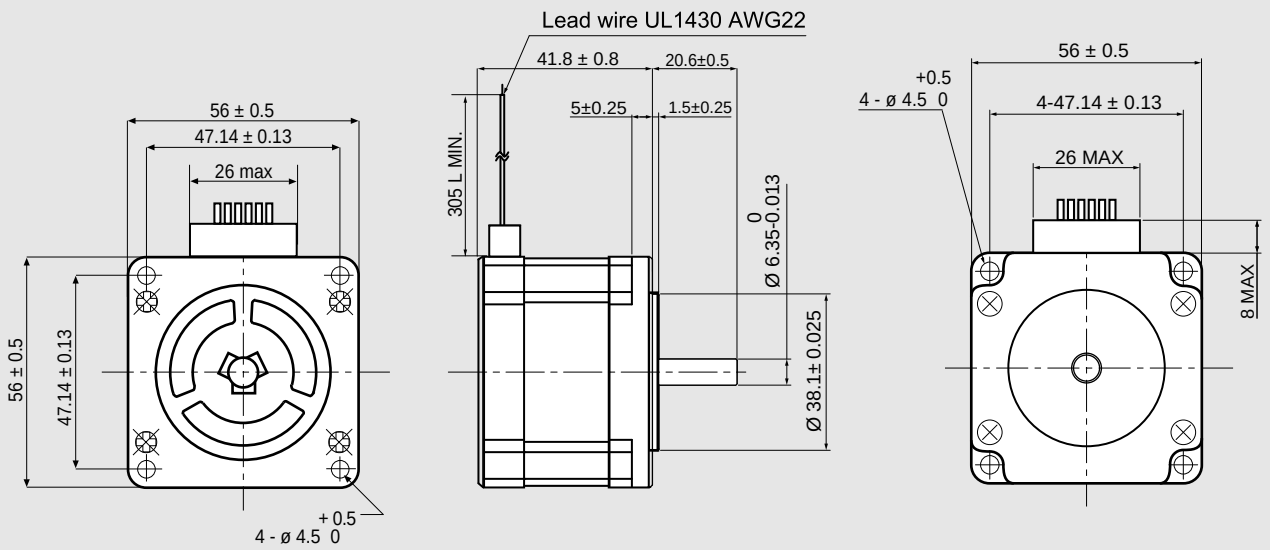


## FEATURES

| MODEL | | 103-H7121-0440 |
|---|---|---|
| BASIC STEP ANGLE | | 1.8° ± 0.09° |
| BIPOLAR CURRENT | (Amp) | 1.5 (*) |
| UNIPOLAR CURRENT | (Amp) | 2.0 |
| RESISTANCE | (Ohm) | 1.25 |
| INDUCTANCE | (mH) | 1.9 |
| BIPOLAR HOLDING TORQUE | (Ncm) | 49 |
| UNIPOLAR HOLDING TORQUE | (Ncm) | 39 |
| ROTOR INERTIA | (Kgm $^2$ x 10 $^{-7}$) | 100 |
| THEORETICAL ACCELERATION | (rad x sec.$^{-2}$) | 50000 |
| BACK E.M.F. | (V/Krpm) | 20 |
| MASS | (Kg) | 0.47 |
| | | |
| LEADS CODE | | IV |

## TORQUE/SPEED CURVE

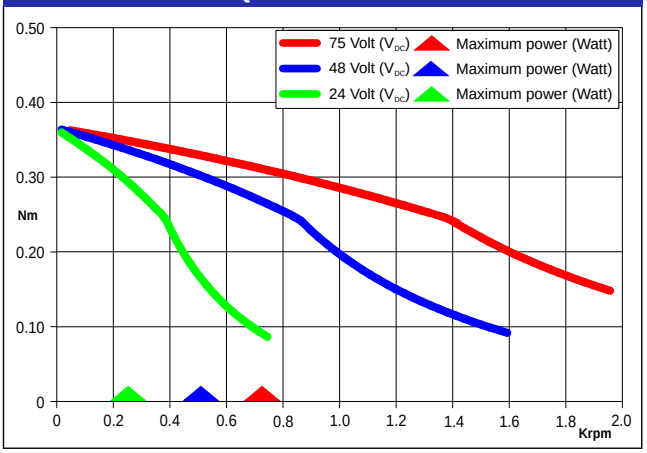


(*)Bipolar series connection.
(*)*Collegamento bipolare serie.*

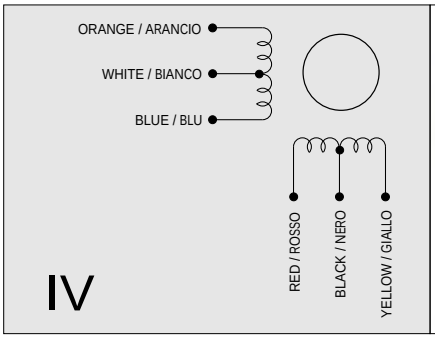


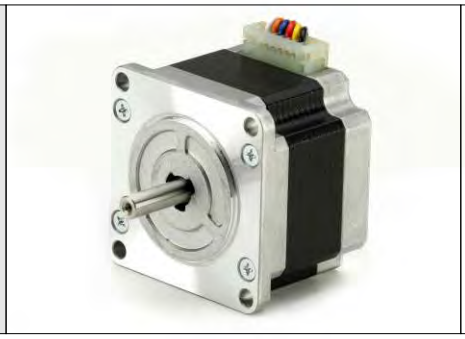

## Suggested R.T.A. driver: BSD Series, CSD/A-CSD Series, NDC/A-NDC Series, HGD Series.

R.T.A. s.r.l. PAVIA (ITALY) SANYO DENKI CO.,Ltd (JAPAN)

# 103-H7123-0140

SANYO DENKI
SANMOTION

## Dimensions (Unit:mm)

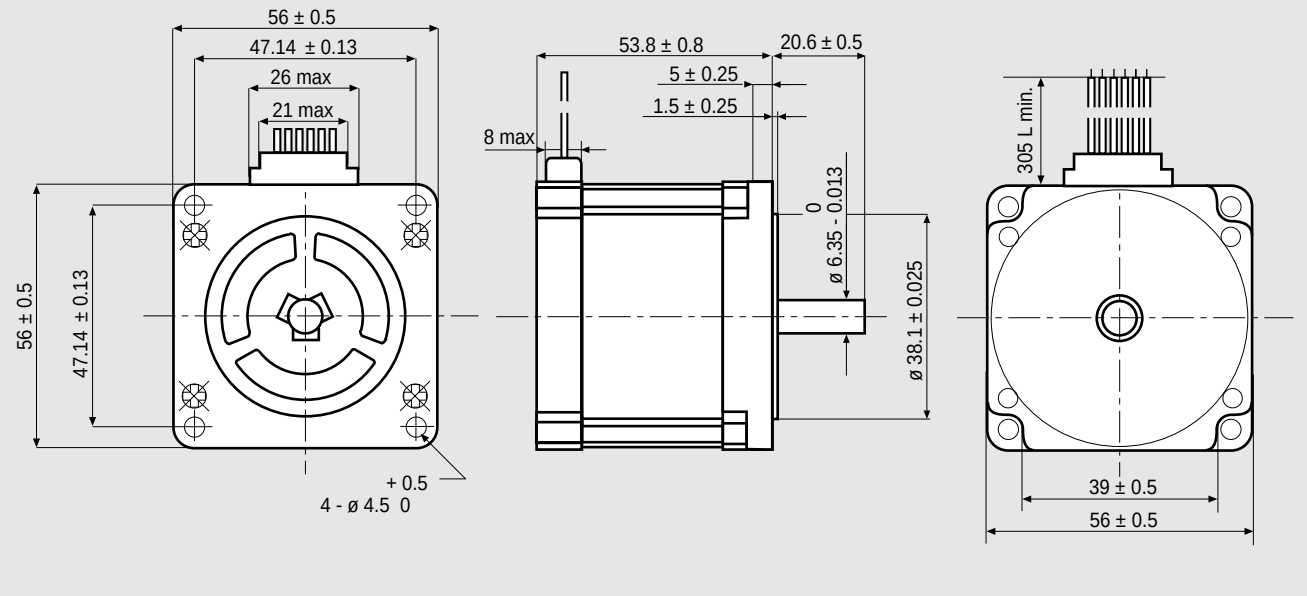


## FEATURES

| MODEL | | 103-H7123-0140 |
|---|---|---|
| BASIC STEP ANGLE | | 1.8° ± 0.09° |
| BIPOLAR CURRENT | (Amp) | 0.7 (*) |
| UNIPOLAR CURRENT | (Amp) | 1.0 |
| RESISTANCE | (Ohm) | 6.7 |
| INDUCTANCE | (mH) | 15 |
| BIPOLAR HOLDING TORQUE | (Ncm) | 110 |
| UNIPOLAR HOLDING TORQUE | (Ncm) | 85 |
| ROTOR INERTIA | (Kgm $^2$ x 10 $^{-7}$) | 210 |
| THEORETICAL ACCELERATION | (rad x sec.$^{-2}$) | 50000 |
| BACK E.M.F. | (V/Krpm) | 60 |
| MASS | (Kg) | 0.65 |
| | | |
| LEADS CODE | | IV |

## TORQUE/SPEED CURVE

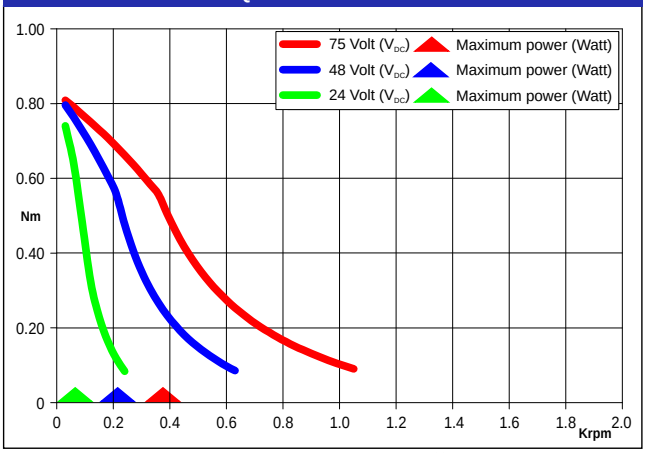


(*)Bipolar series connection.
(*)*Collegamento bipolare serie.*

R.T.A. s.r.l. PAVIA (ITALY) SANYO DENKI CO.,Ltd (JAPAN)

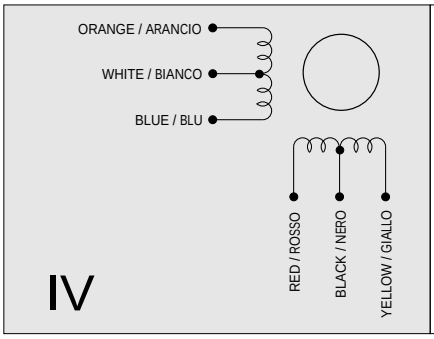

Suggested R.T.A. driver: BSD Series, CSD/A-CSD Series, NDC/A-NDC Series, HGD Series.

# 103-H7123-0440

SANYO DENKI
SANMOTION

## Dimensions (Unit:mm)

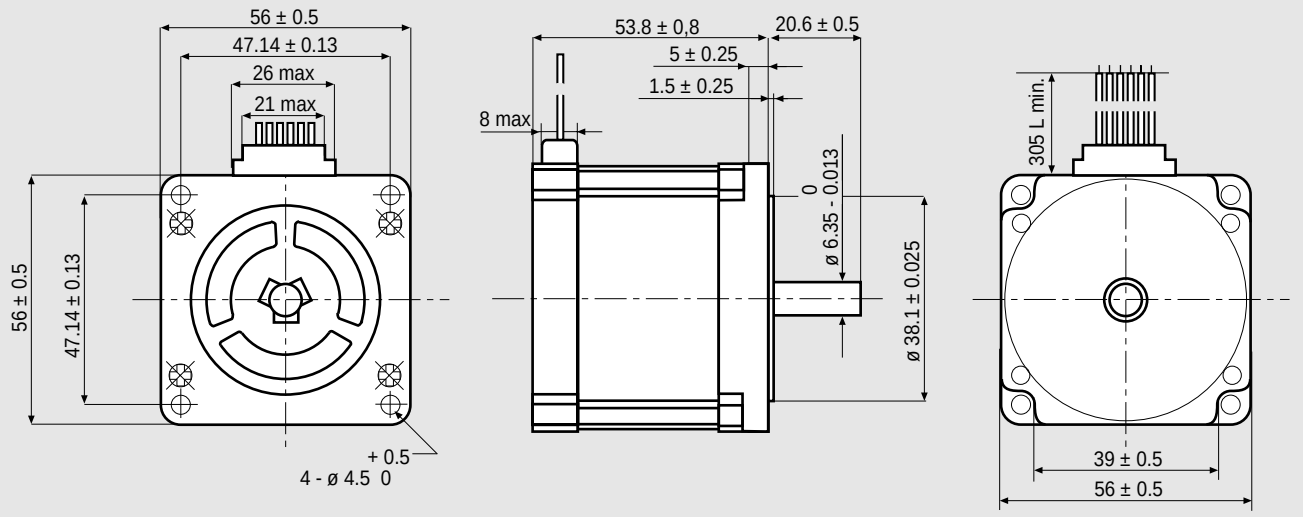


## FEATURES

| MODEL | | 103-H7123-0440 |
|---|---|---|
| BASIC STEP ANGLE | | 1.8° ± 0.09° |
| BIPOLAR CURRENT | (Amp) | 1.5(*) |
| UNIPOLAR CURRENT | (Amp) | 2.0 |
| RESISTANCE | (Ohm) | 1.6 |
| INDUCTANCE | (mH) | 3.8 |
| BIPOLAR HOLDING TORQUE | (Ncm) | 110 |
| UNIPOLAR HOLDING TORQUE | (Ncm) | 85 |
| ROTOR INERTIA | (Kgm $^2$ x 10 $^{-7}$) | 210 |
| THEORETICAL ACCELERATION | (rad x sec.$^{-2}$) | 50000 |
| BACK E.M.F. | (V/Krpm) | 31 |
| MASS | (Kg) | 0.65 |
| | | |
| LEADS CODE | | IV |

## TORQUE/SPEED CURVE

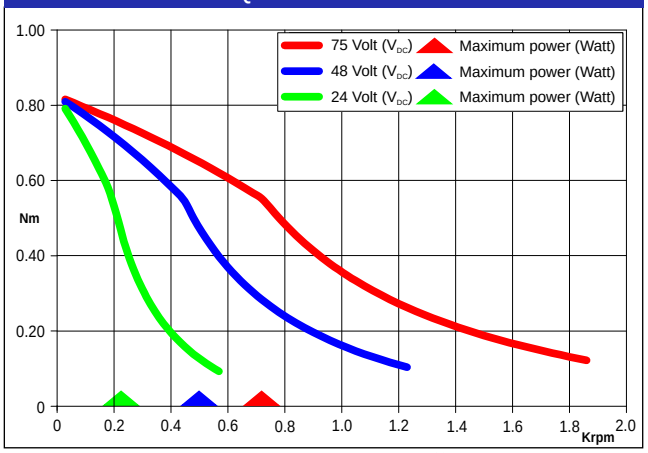


(*)Bipolar series connection.
(*)*Collegamento bipolare serie.*

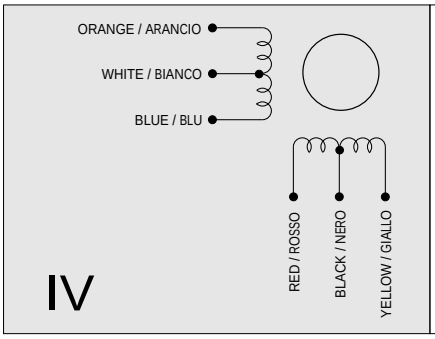


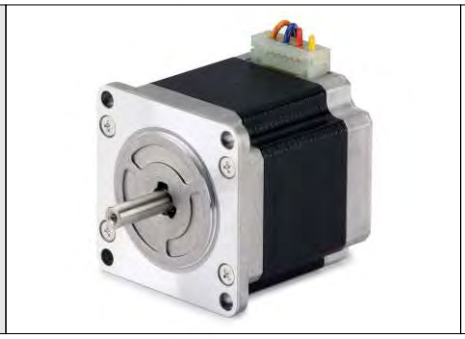

Suggested R.T.A. driver: BSD Series, CSD/A-CSD Series, NDC/A-NDC Series, HGD Series.

R.T.A. s.r.l. PAVIA (ITALY) SANYO DENKI CO.,Ltd (JAPAN)

# 103-H7123-5040

SANYO DENKI
SANMOTION

## Dimensions (Unit:mm)

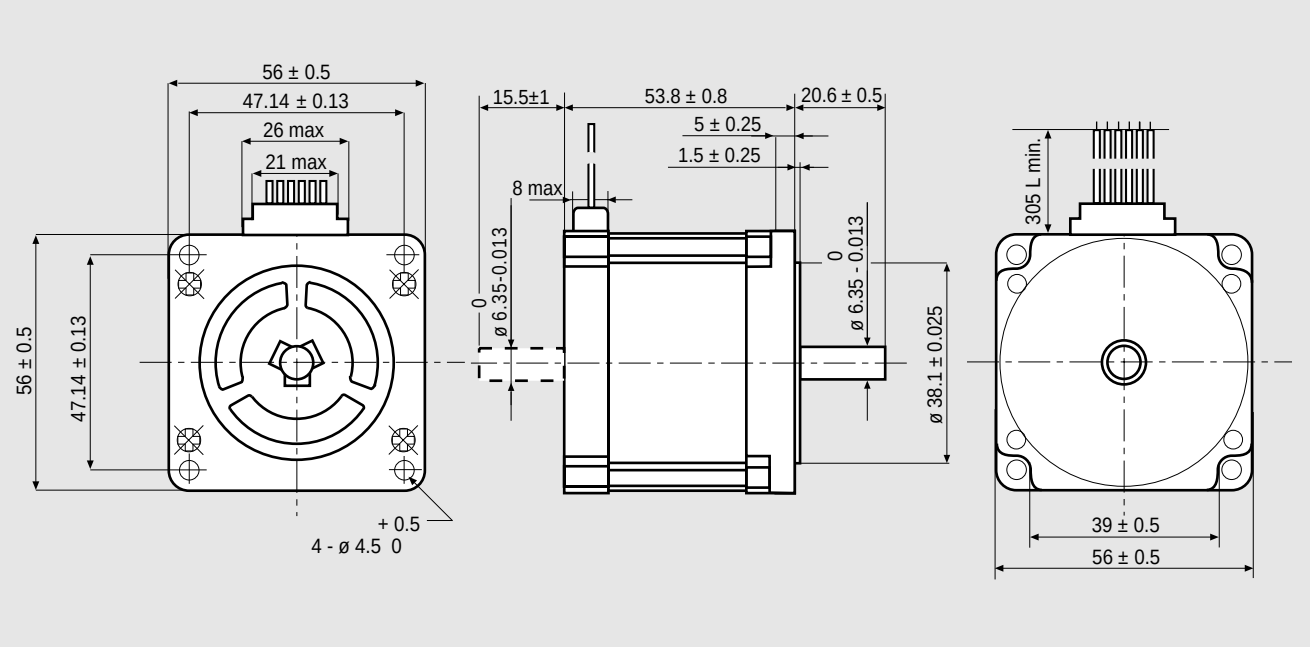


## FEATURES

| MODEL | | 103-H7123-5040 (103-H7123-5010) |
|---|---|---|
| BASIC STEP ANGLE | | 1.8° ± 0.09° |
| BIPOLAR CURRENT | (Amp) | 2.0 |
| UNIPOLAR CURRENT | (Amp) | |
| RESISTANCE | (Ohm) | 0.8 |
| INDUCTANCE | (mH) | 3.8 |
| BIPOLAR HOLDING TORQUE | (Ncm) | 85 |
| UNIPOLAR HOLDING TORQUE | (Ncm) | |
| ROTOR INERTIA | (Kgm $^2$ x 10 $^{-7}$) | 210 |
| THEORETICAL ACCELERATION | (rad x sec.$^{-2}$) | 38500 |
| BACK E.M.F. | (V/Krpm) | 31 |
| MASS | (Kg) | 0.65 |
| | | |
| LEADS CODE | | V |

Codes between brackets refer to double shaft models.
*Le sigle fra parentesi si riferiscono ai modelli bialbero.*

## TORQUE/SPEED CURVE

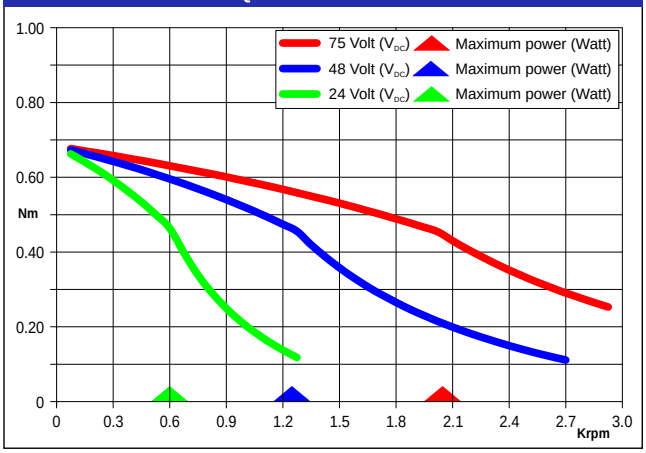


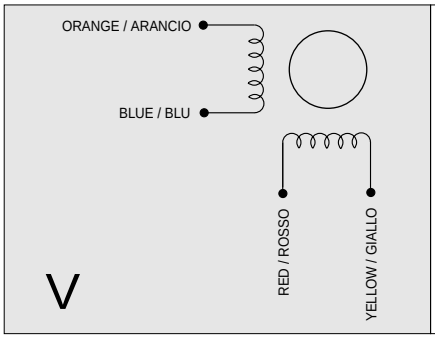

Suggested R.T.A. driver: BSD Series, CSD/A-CSD Series, NDC/A-NDC Series, HGD Series.

R.T.A. s.r.l. PAVIA (ITALY) SANYO DENKI CO.,Ltd (JAPAN)

# 103-H7123-0740

SANYO DENKI
SANMOTION

## Dimensions (Unit:mm)

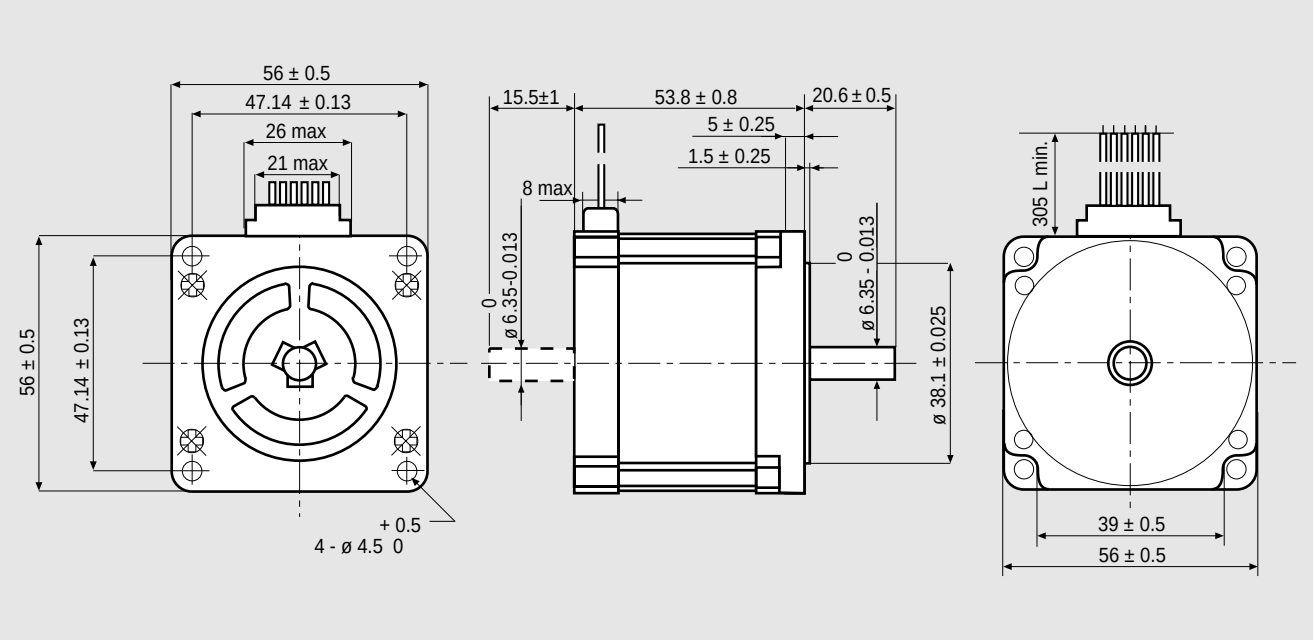


### FEATURES

| MODEL | | 103-H7123-0740 (103-H7123-0710) |
|---|---|---|
| BASIC STEP ANGLE | | 1.8° ± 0.09° |
| BIPOLAR CURRENT | (Amp) | 2.2(*) |
| UNIPOLAR CURRENT | (Amp) | 3.0 |
| RESISTANCE | (Ohm) | 0.77 |
| INDUCTANCE | (mH) | 1.6 |
| BIPOLAR HOLDING TORQUE | (Ncm) | 110 |
| UNIPOLAR HOLDING TORQUE | (Ncm) | 85 |
| ROTOR INERTIA | (Kgm $^2$ x 10 $^{-7}$) | 210 |
| THEORETICAL ACCELERATION | (rad x sec.$^{-2}$) | 50000 |
| BACK E.M.F. | (V/Krpm) | 20 |
| MASS | (Kg) | 0.65 |
| | | |
| LEADS CODE | | IV |

Codes between brackets refer to double shaft models.
*Le sigle fra parentesi si riferiscono ai modelli bialbero.*

### TORQUE/SPEED CURVE

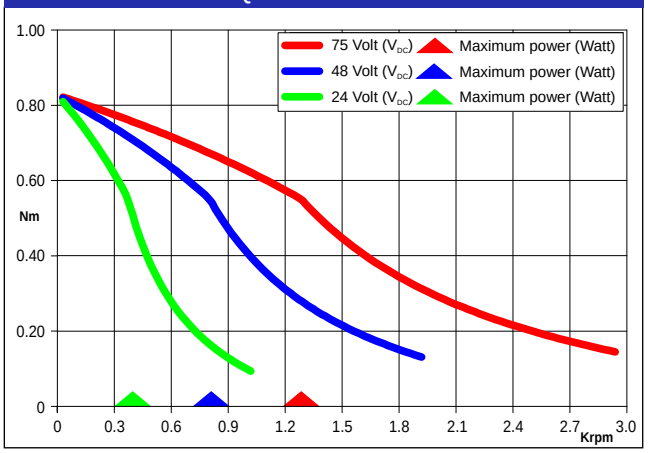


(*)Bipolar series connection.
*(*)Collegamento bipolare serie.*

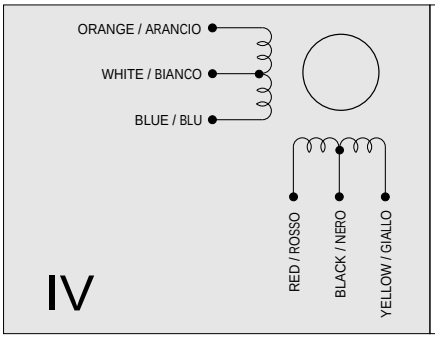


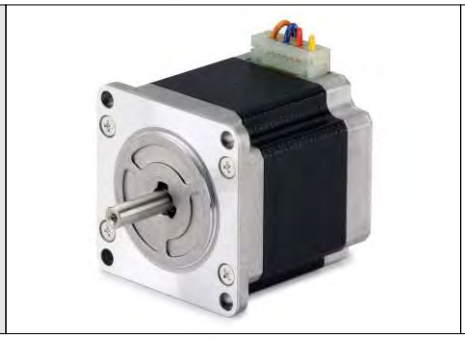

Suggested R.T.A. driver: BSD Series, CSD/A-CSD Series, NDC/A-NDC Series, ADW Series, HGD Series.




SANYO DENKI CO.,Ltd (JAPAN)
R.T.A. s.r.l. PAVIA (ITALY)

# 103-H7123-1749

SANYO DENKI
SANMOTION

## Dimensions (Unit:mm)

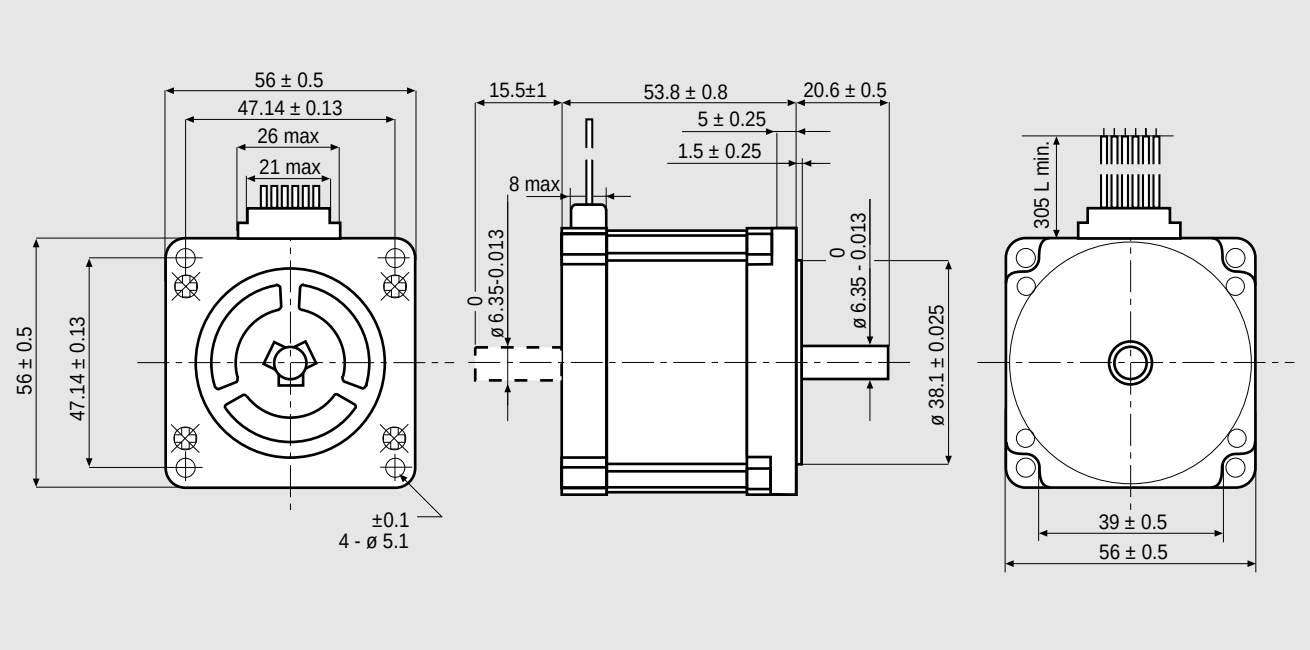


## FEATURES

| MODEL | | 103-H7123-1749 (103-H7123-1711) |
|---|---|---|
| BASIC STEP ANGLE | | 1.8° ± 0.09° |
| BIPOLAR CURRENT | (Amp) | 4.0 |
| UNIPOLAR CURRENT | (Amp) | |
| RESISTANCE | (Ohm) | 0.41 |
| INDUCTANCE | (mH) | 1.6 |
| BIPOLAR HOLDING TORQUE | (Ncm) | 110 |
| UNIPOLAR HOLDING TORQUE | (Ncm) | |
| ROTOR INERTIA | (Kgm $^2$ x 10 $^{-7}$) | 210 |
| THEORETICAL ACCELERATION | (rad x sec.$^{-2}$) | 50000 |
| BACK E.M.F. | (V/Krpm) | 20 |
| MASS | (Kg) | 0.65 |
| | | |
| LEADS CODE | | V |

Codes between brackets refer to double shaft models.
*Le sigle fra parentesi si riferiscono ai modelli bialbero.*

## TORQUE/SPEED CURVE

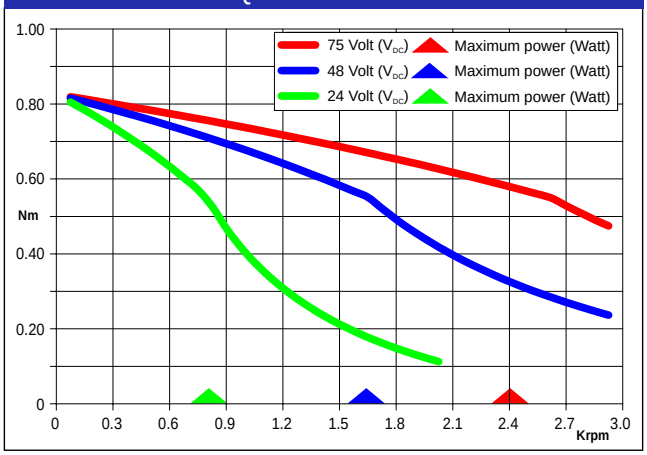


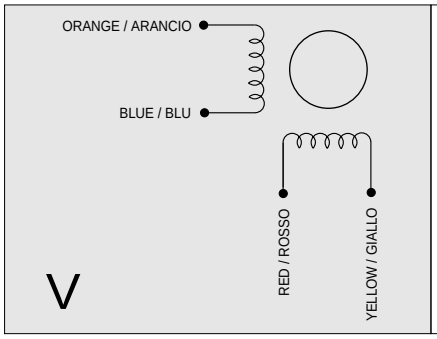


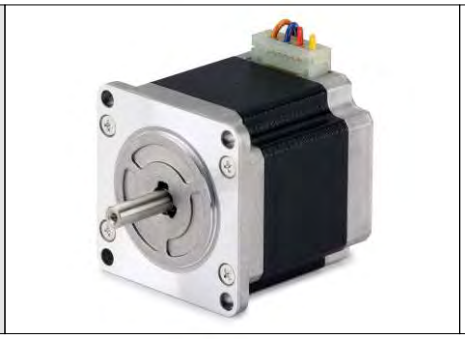

Suggested R.T.A. driver: CSD/CSD J/A-CSD Series, NDC/A-NDC Series, ADW Series, HGD Series, PLUS Series.

R.T.A. s.r.l. PAVIA (ITALY) SANYO DENKI CO.,Ltd (JAPAN)

# 103-H7126-0140

SANYO DENKI
SANMOTION

## Dimensions (Unit:mm)

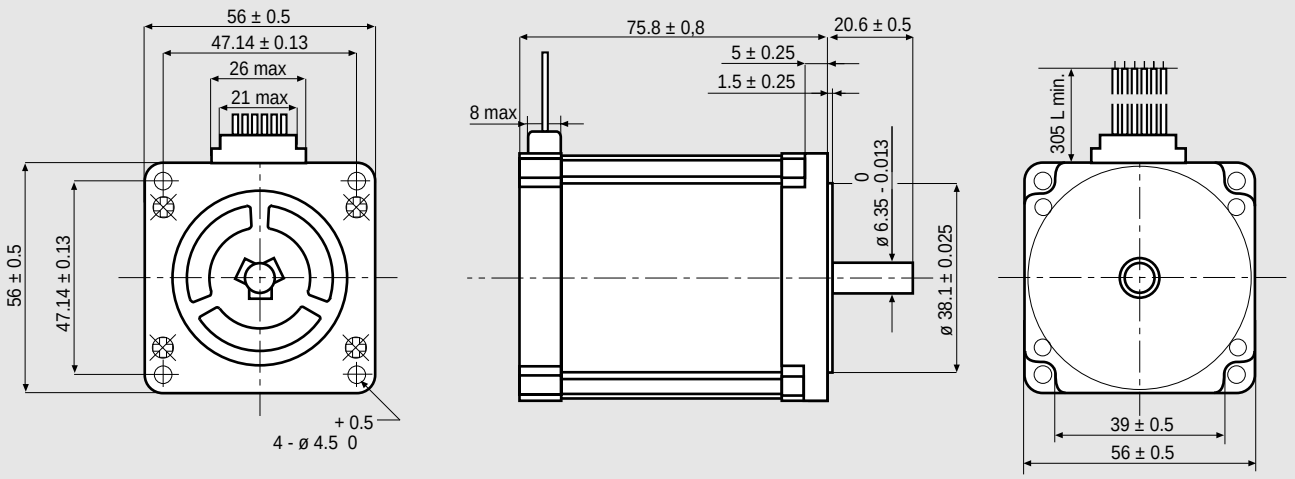


## FEATURES

| MODEL | | 103-H7126-0140 |
|---|---|---|
| BASIC STEP ANGLE | | 1.8° ± 0.09° |
| BIPOLAR CURRENT | (Amp) | 0.75(*) |
| UNIPOLAR CURRENT | (Amp) | 1.0 |
| RESISTANCE | (Ohm) | 8.6 |
| INDUCTANCE | (mH) | 19 |
| BIPOLAR HOLDING TORQUE | (Ncm) | 165 |
| UNIPOLAR HOLDING TORQUE | (Ncm) | 130 |
| ROTOR INERTIA | (Kgm $^2$ x 10 $^{-7}$) | 360 |
| THEORETICAL ACCELERATION | (rad x sec.$^{-2}$) | 45800 |
| BACK E.M.F. | (V/Krpm) | 92 |
| MASS | (Kg) | 1 |
| | | |
| LEADS CODE | | IV |

## TORQUE/SPEED CURVE

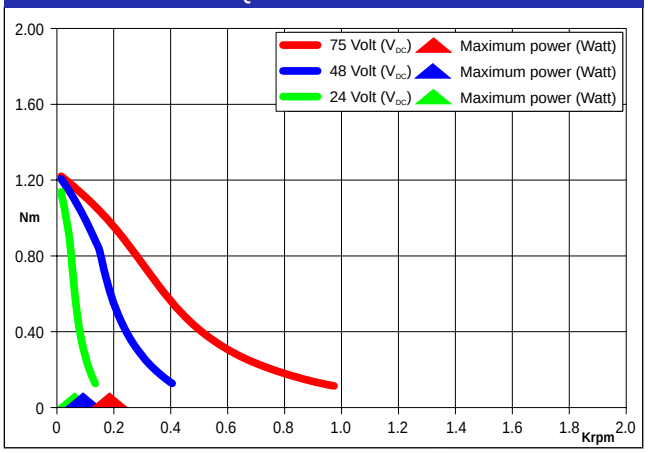


(*)Bipolar series connection.
(*)*Collegamento bipolare serie.*

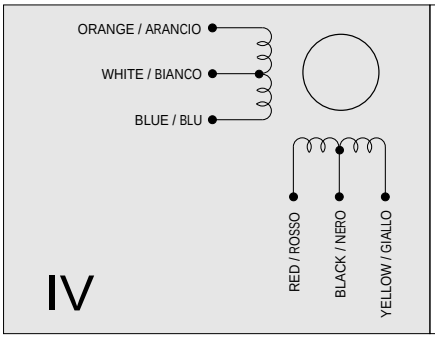

Suggested R.T.A. driver: BSD Series, CSD/A-CSD Series, NDC/A-NDC Series, HGD Series.

R.T.A. s.r.l. PAVIA (ITALY) SANYO DENKI CO.,Ltd (JAPAN)

# 103-H7126-0740

SANYO DENKI
SANMOTION

## Dimensions (Unit:mm)

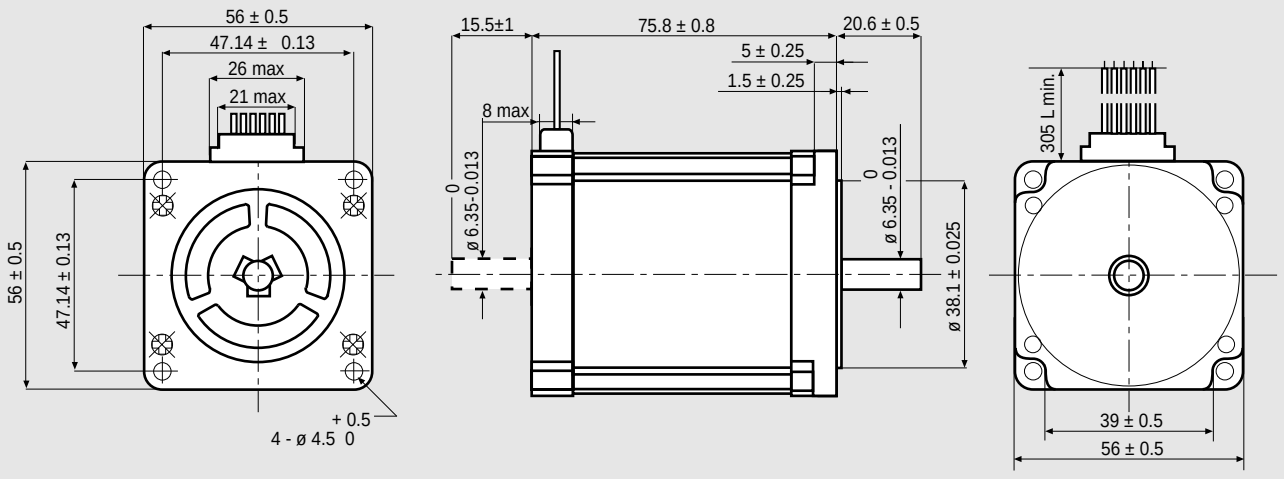


## FEATURES

| MODEL | | 103-H7126-0740 (103-H7126-0710) |
|---|---|---|
| BASIC STEP ANGLE | | 1.8° ± 0.09° |
| BIPOLAR CURRENT | (Amp) | 2.2 (*) |
| UNIPOLAR CURRENT | (Amp) | 3 |
| RESISTANCE | (Ohm) | 0.9 |
| INDUCTANCE | (mH) | 2.2 |
| BIPOLAR HOLDING TORQUE | (Ncm) | 165 |
| UNIPOLAR HOLDING TORQUE | (Ncm) | 130 |
| ROTOR INERTIA | (Kgm $^2$ x 10 $^{-7}$) | 360 |
| THEORETICAL ACCELERATION | (rad x sec.$^{-2}$) | 45800 |
| BACK E.M.F. | (V/Krpm) | 31 |
| MASS | (Kg) | 1 |
| | | |
| LEADS CODE | | IV |

Codes between brackets refer to double shaft models.
*Le sigle fra parentesi si riferiscono ai modelli bialbero.*

## TORQUE/SPEED CURVE

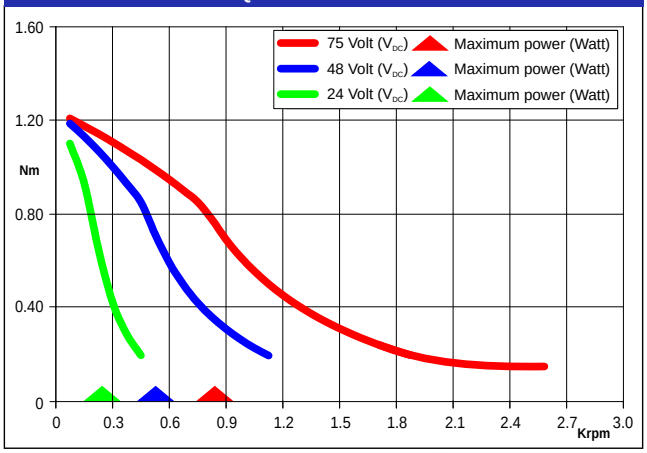


(*)Bipolar series connection.
*(*)Collegamento bipolare serie.*

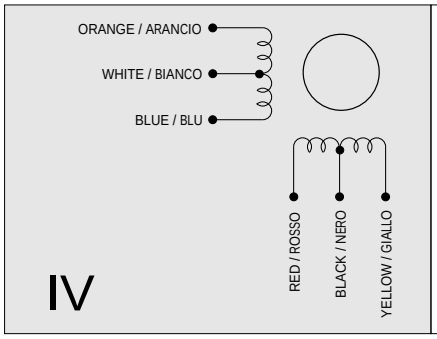

Suggested R.T.A. driver: BSD Series, CSD/A-CSD Series, NDC/A-NDC Series, ADW Series, HGD Series.

R.T.A. s.r.l. PAVIA (ITALY) SANYO DENKI CO.,Ltd (JAPAN)

# 103-H7126-1740

SANYO DENKI
SANMOTION

## Dimensions (Unit:mm)

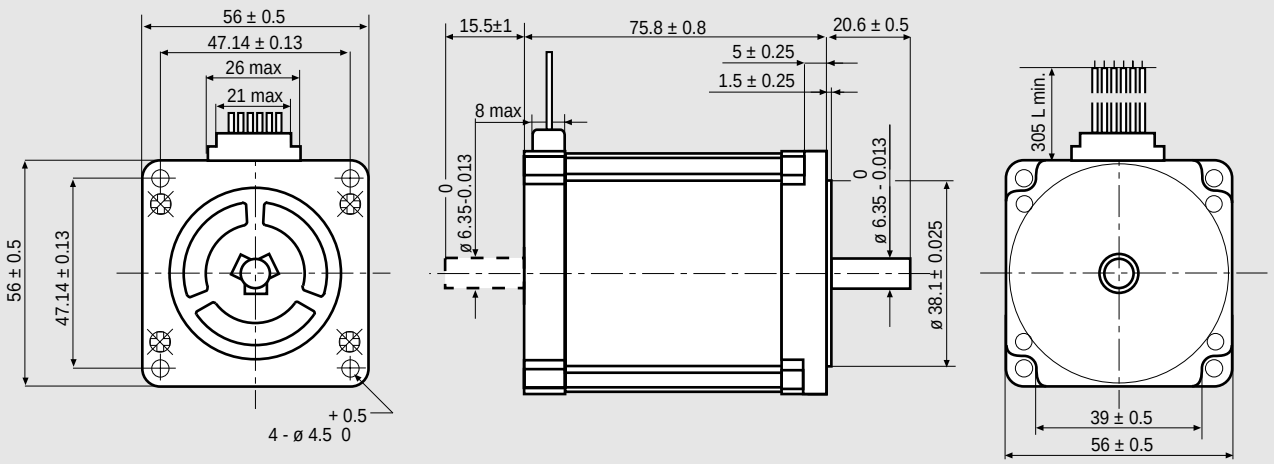


## FEATURES

| MODEL | | 103-H7126-1740 (103-H7126-1710) |
|---|---|---|
| BASIC STEP ANGLE | | 1.8° ± 0.09° |
| BIPOLAR CURRENT | (Amp) | 4.0 |
| UNIPOLAR CURRENT | (Amp) | |
| RESISTANCE | (Ohm) | 0.48 |
| INDUCTANCE | (mH) | 2.2 |
| BIPOLAR HOLDING TORQUE | (Ncm) | 165 |
| UNIPOLAR HOLDING TORQUE | (Ncm) | |
| ROTOR INERTIA | (Kgm $^2$ x 10 $^{-7}$) | 360 |
| THEORETICAL ACCELERATION | (rad x sec.$^{-2}$) | 45800 |
| BACK E.M.F. | (V/Krpm) | 31 |
| MASS | (Kg) | 1 |
| | | |
| LEADS CODE | | V |

Codes between brackets refer to double shaft models.
*Le sigle fra parentesi si riferiscono ai modelli bialbero.*

## TORQUE/SPEED CURVE

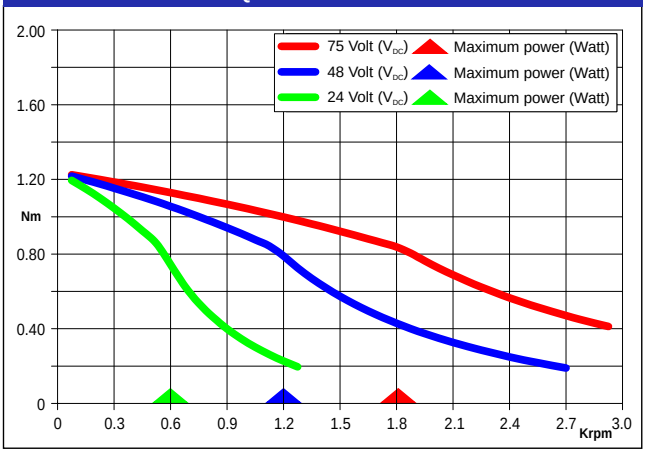


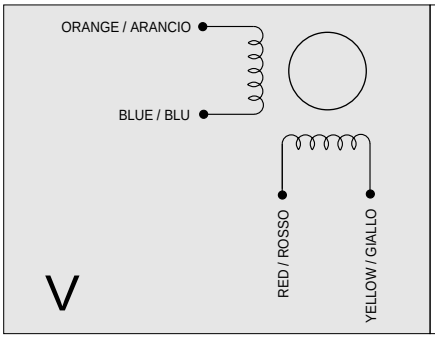

Suggested R.T.A. driver: CSD/CSD J/A-CSD Series, NDC/A-NDC Series, ADW Series, HGD Series, PLUS Series.




R.T.A. s.r.l. PAVIA (ITALY) SANYO DENKI CO.,Ltd (JAPAN)

# 103-H7126-6640

SANYO DENKI
SANMOTION

## Dimensions (Unit:mm)

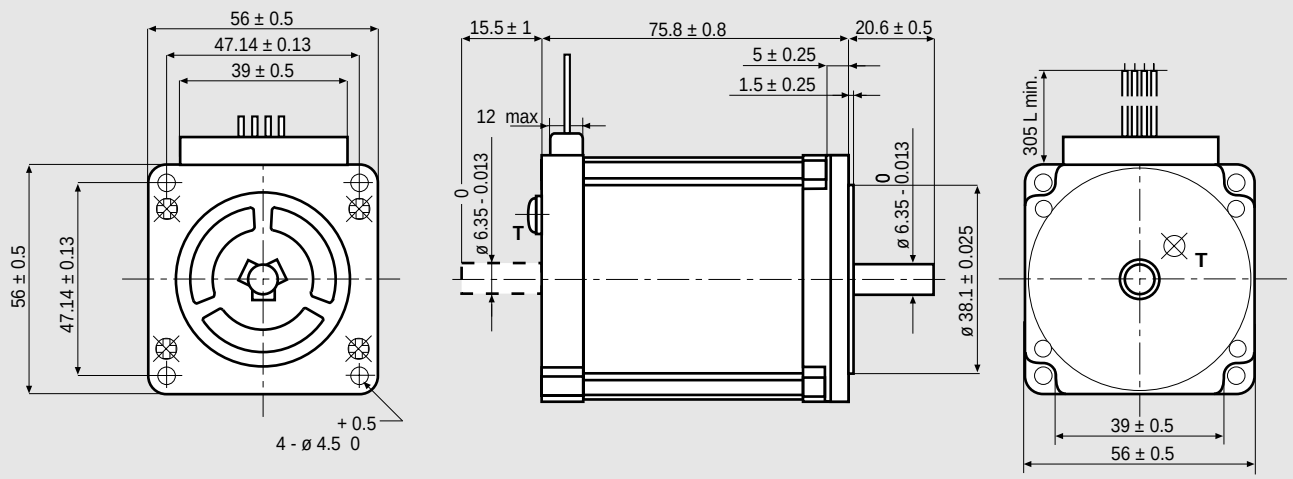


T IS THE EARTH TERMINAL

## FEATURES

| MODEL | | 103-H7126-6640 (103-H7126-6610) |
|---|---|---|
| BASIC STEP ANGLE | | 1.8° ± 0.09° |
| BIPOLAR CURRENT | (Amp) | 5.6 |
| UNIPOLAR CURRENT | (Amp) | |
| RESISTANCE | (Ohm) | 0.3 |
| INDUCTANCE | (mH) | 0.85 |
| BIPOLAR HOLDING TORQUE | (Ncm) | 165 |
| UNIPOLAR HOLDING TORQUE | (Ncm) | |
| ROTOR INERTIA | (Kgm $^2$ x 10 $^{-7}$) | 360 |
| THEORETICAL ACCELERATION | (rad x sec.$^{-2}$) | 45800 |
| BACK E.M.F. | (V/Krpm) | 23 |
| MASS | (Kg) | 1 |
| PROTECTION DEGREE | | IP43 |
| LEADS CODE | | V |

Codes between brackets refer to double shaft models.
*Le sigle fra parentesi si riferiscono ai modelli bialbero.*

## TORQUE/SPEED CURVE

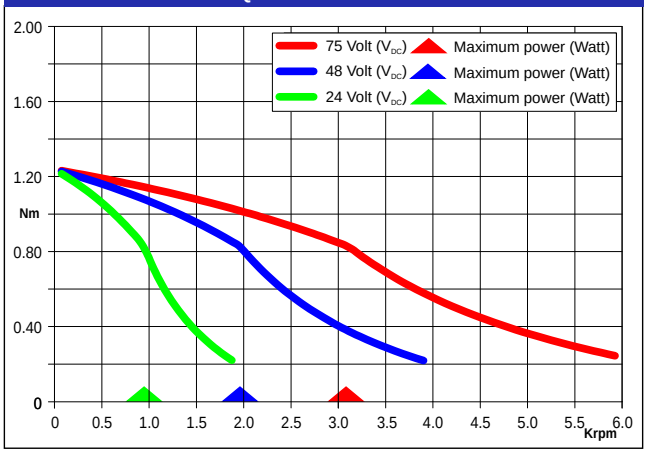


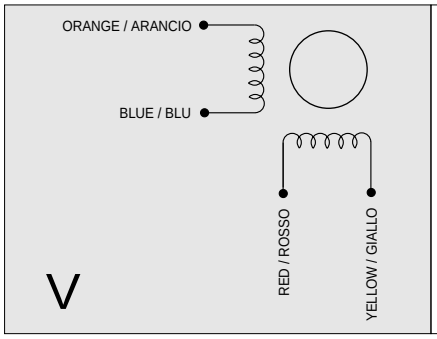

Suggested R.T.A. driver: NDC/A-NDC Series, ADW Series, HGD Series, PLUS Series.

R.T.A. s.r.l. PAVIA (ITALY) SANYO DENKI CO.,Ltd (JAPAN)

# 103-H7823-0740

SANYO DENKI
SANMOTION

## Dimensions (Unit:mm)

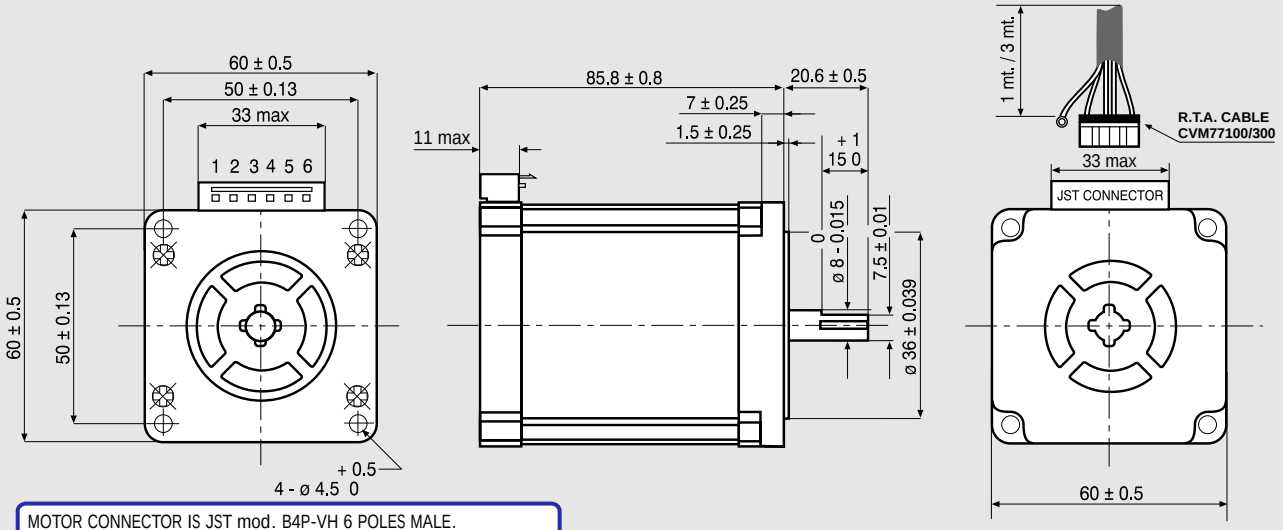


MOTOR CONNECTOR IS JST mod. B4P-VH 6 POLES MALE.
FOR CONNECTION USE JST mod. VHR-6N FEMALE CONNECTOR AND mod. SVH-21 T-P1.1 CONTACTS.
NOTE: 103-H7823-0740 MOTORS NEED CVM77100 AND CVM77300 R.T.A. CABLES. CONTACT R.T.A. FOR FURTHER DETAILS.

### FEATURES

| MODEL | | 103-H7823-0740 |
|---|---|---|
| BASIC STEP ANGLE | | 1.8° ± 0.09° |
| BIPOLAR CURRENT | (Amp) | 2.2(*) |
| UNIPOLAR CURRENT | (Amp) | 3.0 |
| RESISTANCE | (Ohm) | 1.25 |
| INDUCTANCE | (mH) | 2.4 |
| BIPOLAR HOLDING TORQUE | (Ncm) | 300 |
| UNIPOLAR HOLDING TORQUE | (Ncm) | 240 |
| ROTOR INERTIA | (Kgm $^2$ x 10 $^{-7}$) | 840 |
| THEORETICAL ACCELERATION | (rad x sec.$^{-2}$) | 35700 |
| BACK E.M.F. | (V/Krpm) | 55 |
| MASS | (Kg) | 1.4 |
| | | |
| LEADS CODE | | IV |

### TORQUE/SPEED CURVE

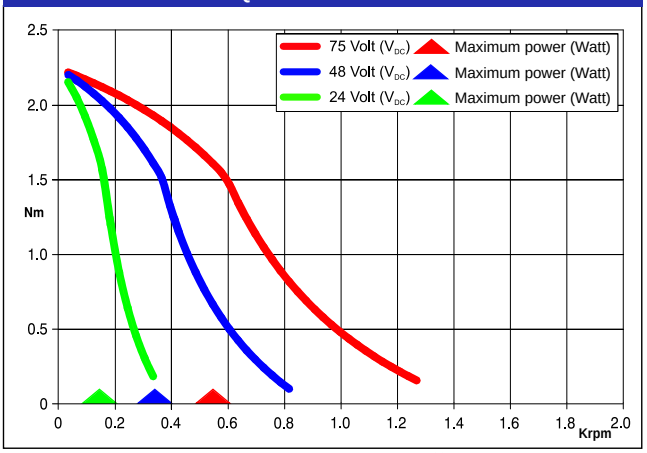


(*)Bipolar series connection.
(*)*Collegamento bipolare serie.*

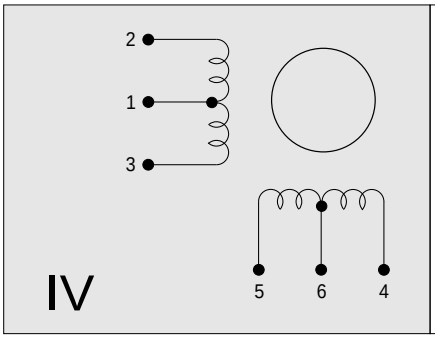

Suggested R.T.A. driver: BSD Series, ADW Series.

R.T.A. s.r.l. PAVIA (ITALY) SANYO DENKI CO.,Ltd (JAPAN)

# 103-H7823-1740

SANYO DENKI
SANMOTION

## Dimensions (Unit:mm)

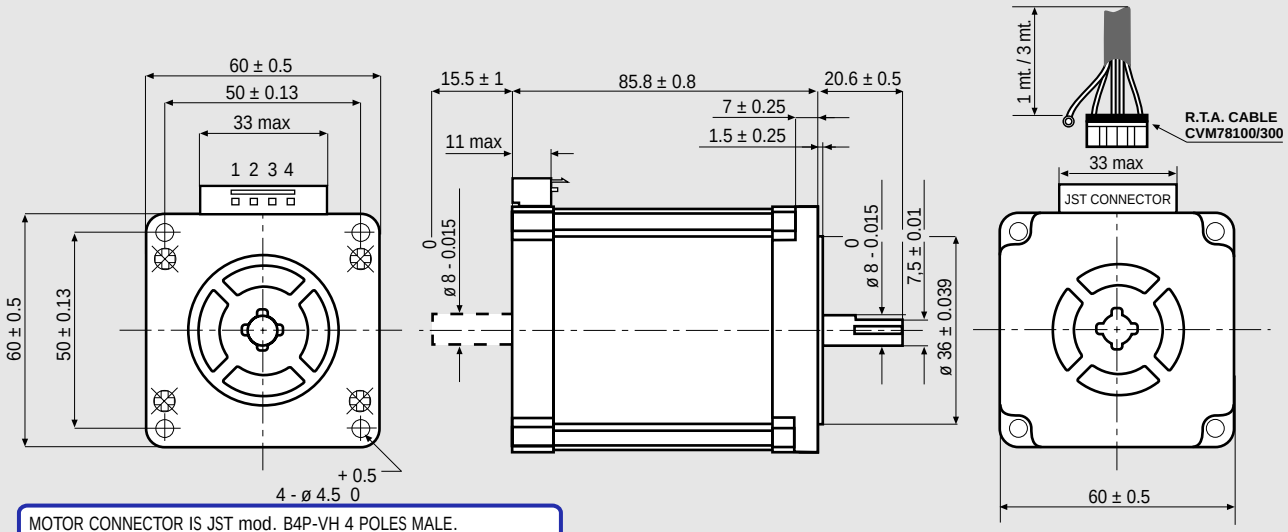


MOTOR CONNECTOR IS JST mod. B4P-VH 4 POLES MALE.
FOR CONNECTION USE JST mod. VHR-4N FEMALE CONNECTOR AND mod. SVH-21 T-P1.1 CONTACTS.
NOTE: 103-H7823-1740 MOTORS NEED CVM78100 AND CVM78300 R.T.A. CABLES. CONTACT R.T.A. FOR FURTHER DETAILS.

## FEATURES

| MODEL | | 103-H7823-1740 (103-H7823-1714) |
|---|---|---|
| BASIC STEP ANGLE | | 1.8° ± 0.09° |
| BIPOLAR CURRENT | (Amp) | 4.0 |
| UNIPOLAR CURRENT | (Amp) | |
| RESISTANCE | (Ohm) | 0.65 |
| INDUCTANCE | (mH) | 2.4 |
| BIPOLAR HOLDING TORQUE | (Ncm) | 300 |
| UNIPOLAR HOLDING TORQUE | (Ncm) | |
| ROTOR INERTIA | (Kgm $^2$ x 10 $^{-7}$) | 840 |
| THEORETICAL ACCELERATION | (rad x sec.$^{-2}$) | 35700 |
| BACK E.M.F. | (V/Krpm) | 75 |
| MASS | (Kg) | 1.4 |
| | | |
| LEADS CODE | | V |

Codes between brackets refer to double shaft models.
*Le sigle fra parentesi si riferiscono ai modelli bialbero.*

## TORQUE/SPEED CURVE

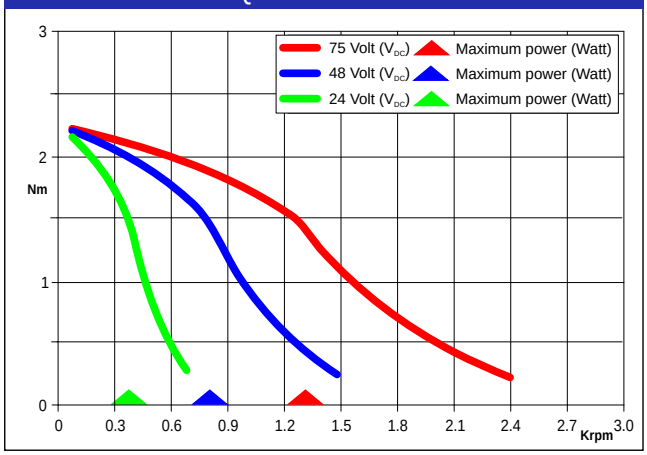


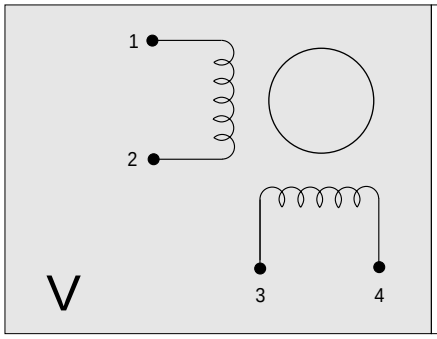

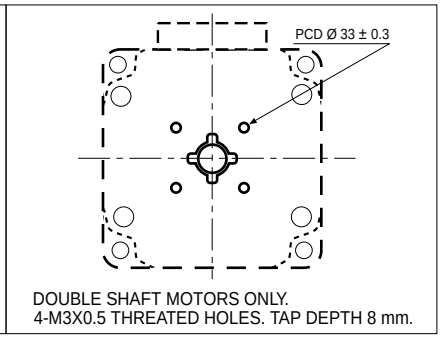


DOUBLE SHAFT MOTORS ONLY.
4-M3X0.5 THREATED HOLES. TAP DEPTH 8 mm.

Suggested R.T.A. driver: CSD/CSD J/A-CSD Series, NDC/A-NDC Series, ADW Series, HGD Series, PLUS Series.

R.T.A. s.r.l. PAVIA (ITALY) SANYO DENKI CO.,Ltd (JAPAN)

# 103-845-6741

SANYO DENKI
SANMOTION

## Dimensions (Unit:mm)

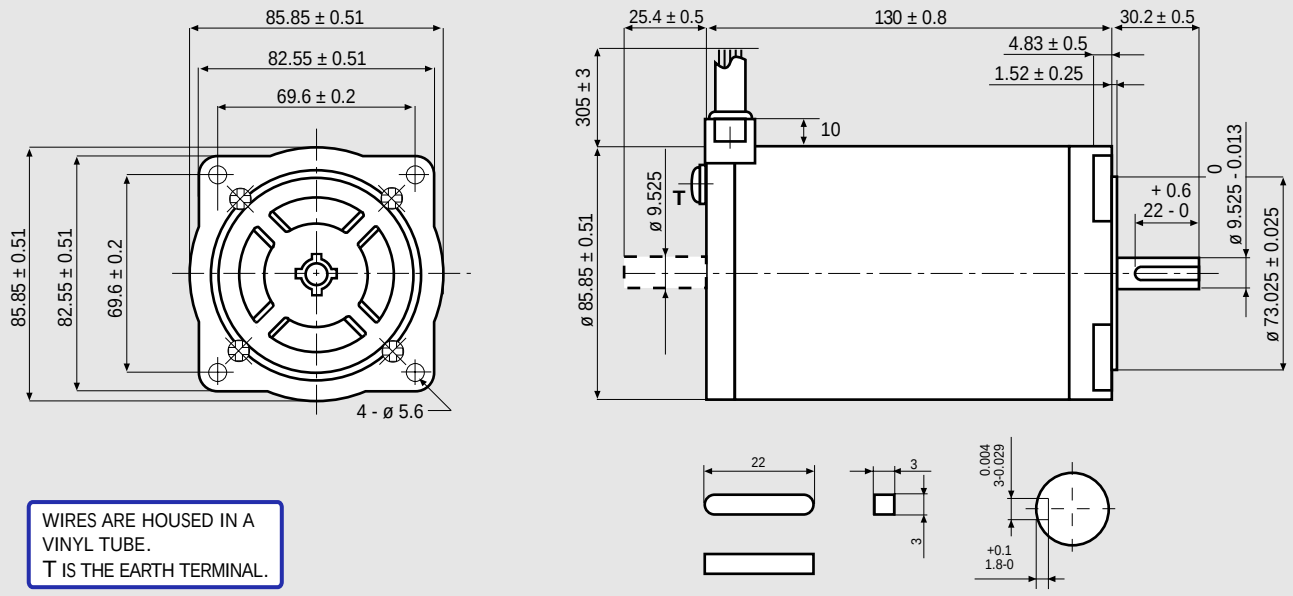


WIRES ARE HOUSED IN A VINYL TUBE.
T IS THE EARTH TERMINAL.

## FEATURES

| MODEL | | 103-845-6741 (103-845-6711) |
|---|---|---|
| BASIC STEP ANGLE | | 1.8° ± 0.09° |
| BIPOLAR CURRENT | (Amp) | 9.5 |
| UNIPOLAR CURRENT | (Amp) | 6.7 |
| RESISTANCE | (Ohm) | 0.45 |
| INDUCTANCE | (mH) | 2.0 |
| BIPOLAR HOLDING TORQUE | (Ncm) | 510 |
| UNIPOLAR HOLDING TORQUE | (Ncm) | 410 |
| ROTOR INERTIA | (Kgm $^2$ x 10 $^{-7}$) | 1550 |
| THEORETICAL ACCELERATION | (rad x sec.$^{-2}$) | 32900 |
| BACK E.M.F. | (V/Krpm) | 46 |
| MASS | (Kg) | 3.6 |
| PROTECTION DEGREE | | IP43 |
| LEADS CODE | | II |

Codes between brackets refer to double shaft models.
*Le sigle fra parentesi si riferiscono ai modelli bialbero.*

## TORQUE/SPEED CURVE

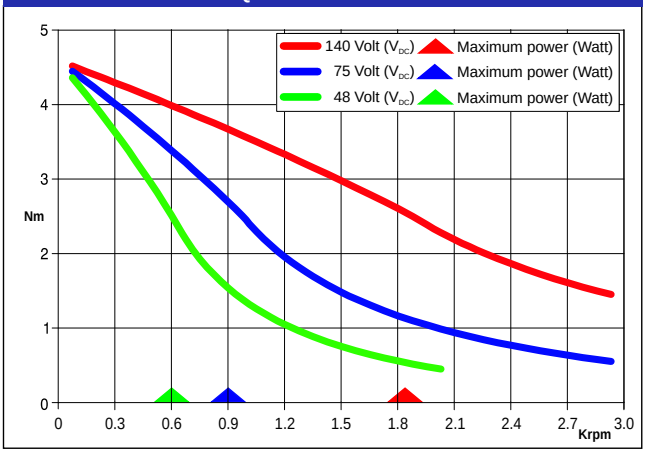


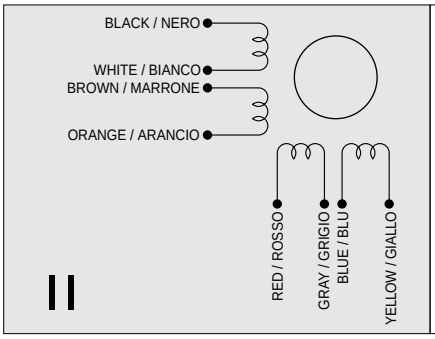

## Suggested R.T.A. driver: PLUS Series.




R.T.A. s.r.l. PAVIA (ITALY) SANYO DENKI CO.,Ltd (JAPAN)

# 103-845-67S1

SANYO DENKI
SANMOTION

## Dimensions (Unit:mm)

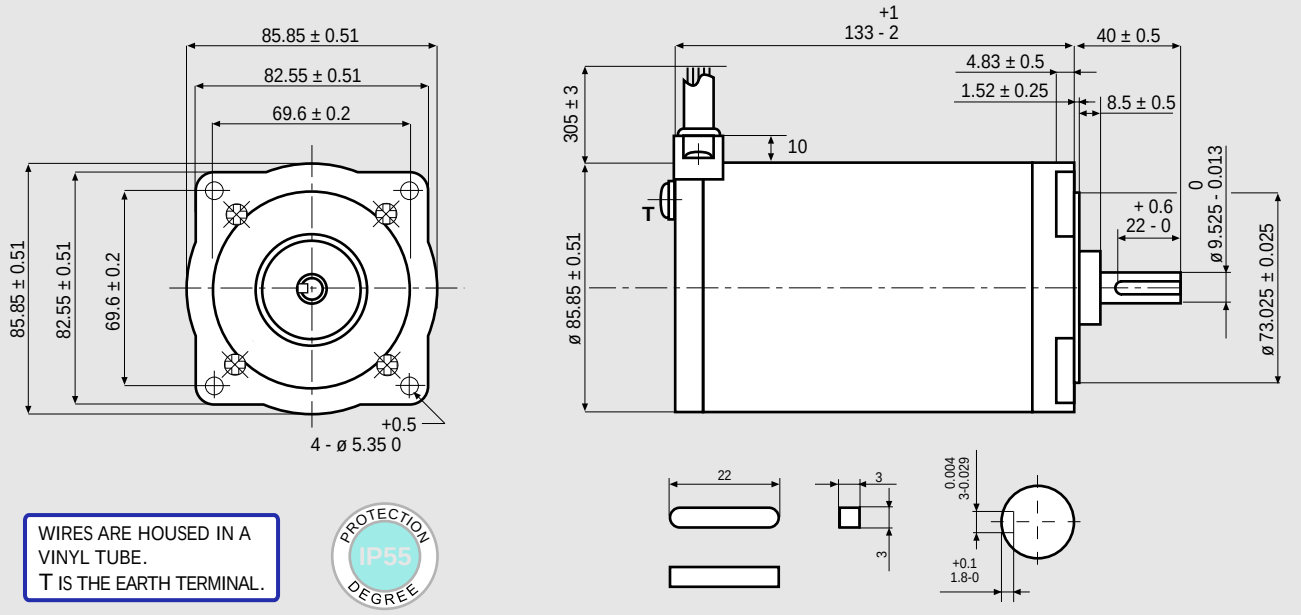


WIRES ARE HOUSED IN A VINYL TUBE.
T IS THE EARTH TERMINAL.

PROTECTION IP55 DEGREE

## FEATURES

| MODEL | | 103-845-67S1 |
|---|---|---|
| BASIC STEP ANGLE | | 1.8° ± 0.09° |
| BIPOLAR CURRENT | (Amp) | 9.5 |
| UNIPOLAR CURRENT | (Amp) | 6.7 |
| RESISTANCE | (Ohm) | 0.45 |
| INDUCTANCE | (mH) | 2.0 |
| BIPOLAR HOLDING TORQUE | (Ncm) | 510 |
| UNIPOLAR HOLDING TORQUE | (Ncm) | 410 |
| ROTOR INERTIA | (Kgm $^2$ x 10 $^{-7}$) | 1550 |
| THEORETICAL ACCELERATION | (rad x sec.$^{-2}$) | 32900 |
| BACK E.M.F. | (V/Krpm) | 46 |
| MASS | (Kg) | 3.6 |
| PROTECTION DEGREE | | IP55 |
| LEADS CODE | | II |

## TORQUE/SPEED CURVE

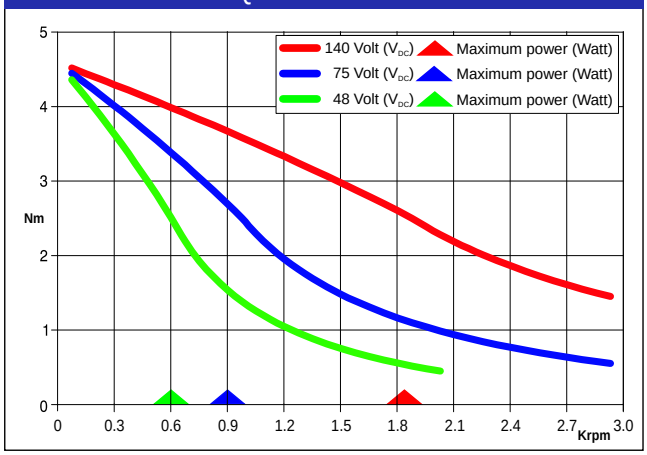


SANYO DENKI CO.,Ltd (JAPAN)
R.T.A. s.r.l. PAVIA (ITALY)

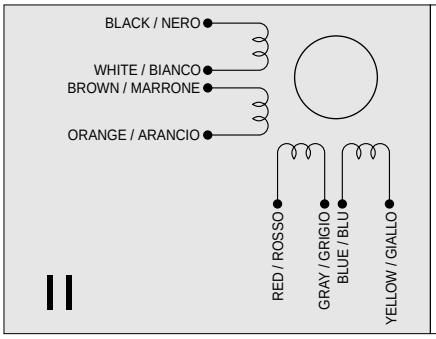

Suggested R.T.A. driver: PLUS Series.

# 103-845-67S41

SANYO DENKI
SANMOTION

## Dimensions (Unit:mm)

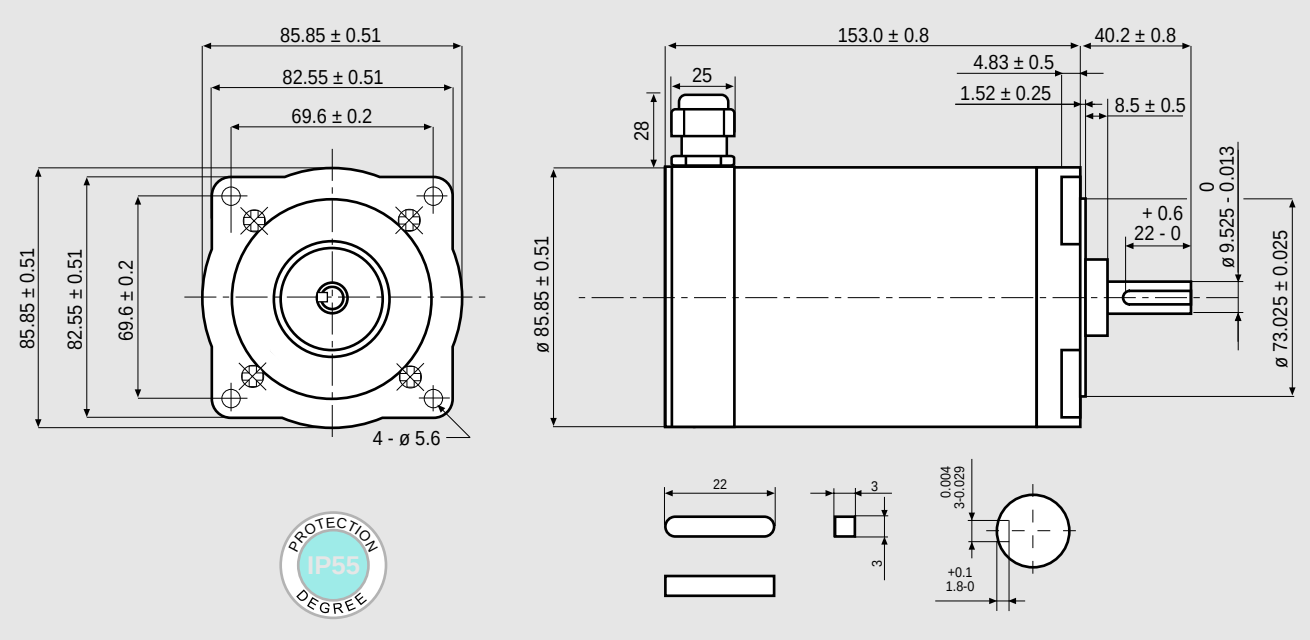


## FEATURES

| MODEL | | 103-845-67S41 |
|---|---|---|
| BASIC STEP ANGLE | | 1.8° ± 0.09° |
| BIPOLAR CURRENT | (Amp) | 9.5 |
| UNIPOLAR CURRENT | (Amp) | 6.7 |
| RESISTANCE | (Ohm) | 0.45 |
| INDUCTANCE | (mH) | 2.0 |
| BIPOLAR HOLDING TORQUE | (Ncm) | 510 |
| UNIPOLAR HOLDING TORQUE | (Ncm) | 410 |
| ROTOR INERTIA | (Kgm $^2$ x 10 $^{-7}$) | 1550 |
| THEORETICAL ACCELERATION | (rad x sec.$^{-2}$) | 32900 |
| BACK E.M.F. | (V/Krpm) | 46 |
| MASS | (Kg) | 3.9 |
| PROTECTION DEGREE | | IP55 |
| LEADS CODE | | VI |

## TORQUE/SPEED CURVE

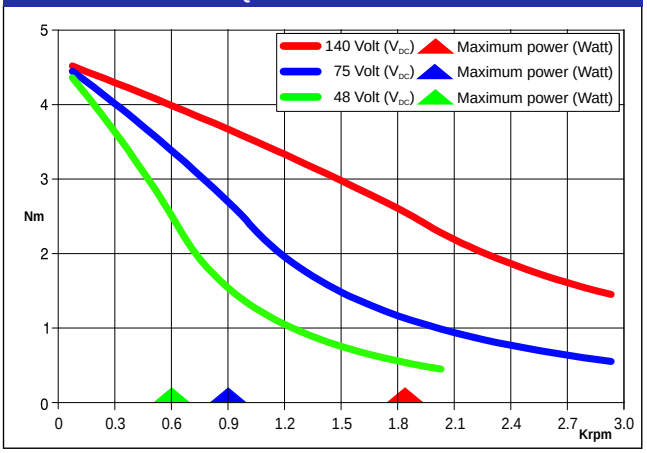


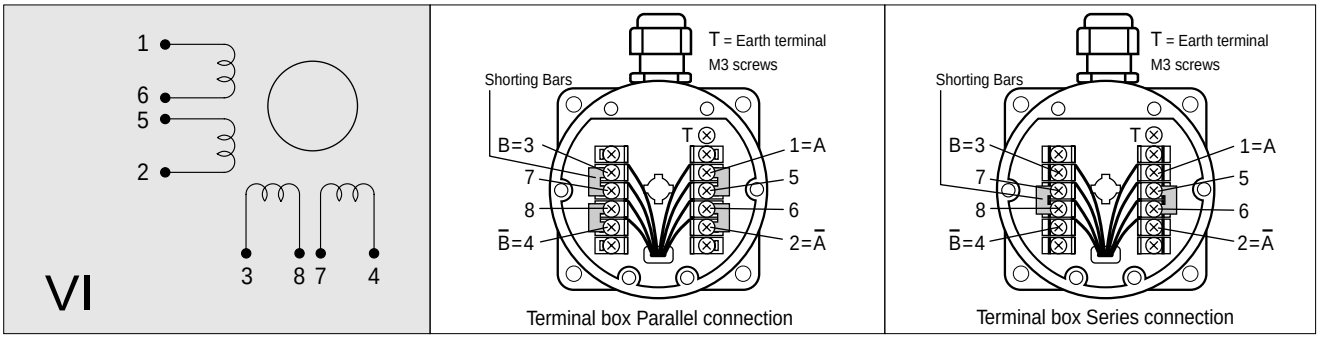


## Suggested R.T.A. driver: PLUS Series.

R.T.A. s.r.l. PAVIA (ITALY) SANYO DENKI CO.,Ltd (JAPAN)

# 103-H8221-6241

SANYO DENKI
SANMOTION

## Dimensions (Unit:mm)

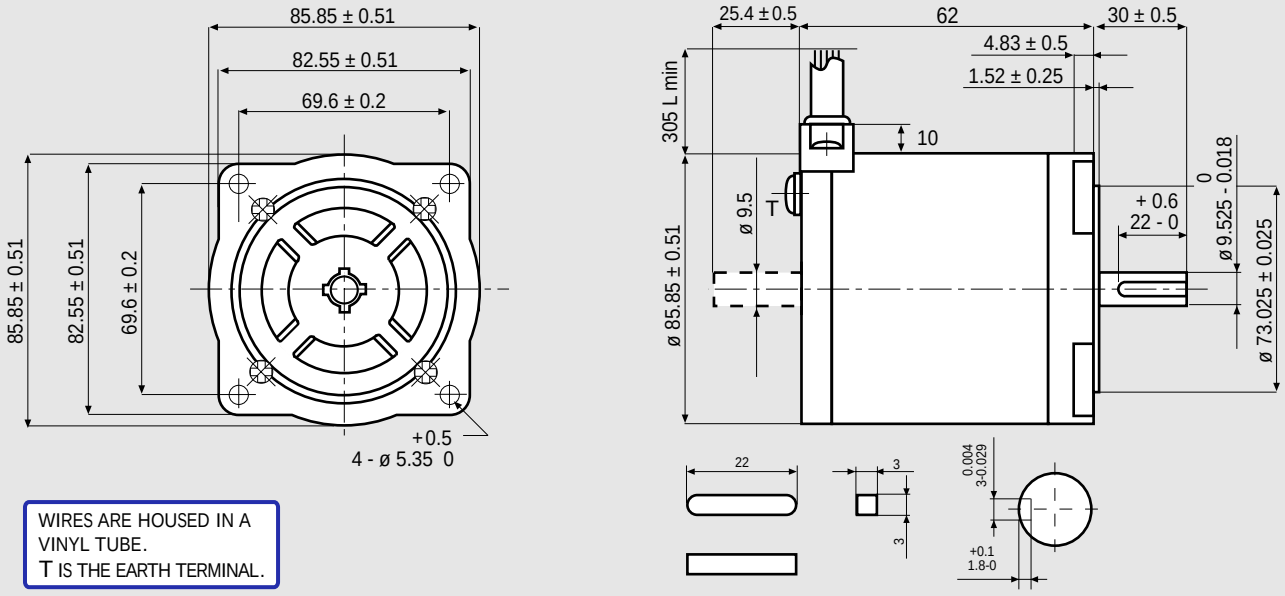


WIRES ARE HOUSED IN A VINYL TUBE.
T IS THE EARTH TERMINAL.

## FEATURES

| MODEL | | 103-H8221-6241 (103-H8221-6211) |
|---|---|---|
| BASIC STEP ANGLE | | 1.8° ± 0.09° |
| BIPOLAR CURRENT | (Amp) | 6.0 |
| UNIPOLAR CURRENT | (Amp) | |
| RESISTANCE | (Ohm) | 0.3 |
| INDUCTANCE | (mH) | 1.65 |
| BIPOLAR HOLDING TORQUE | (Ncm) | 300 |
| UNIPOLAR HOLDING TORQUE | (Ncm) | |
| ROTOR INERTIA | (Kgm $^2$ x 10 $^{-7}$) | 1450 |
| THEORETICAL ACCELERATION | (rad x sec.$^{-2}$) | 20600 |
| BACK E.M.F. | (V/Krpm) | 50 |
| MASS | (Kg) | 1.5 |
| PROTECTION DEGREE | | IP43 |
| LEADS CODE | | V |

Codes between brackets refer to double shaft models.
*Le sigle fra parentesi si riferiscono ai modelli bialbero.*

## TORQUE/SPEED CURVE

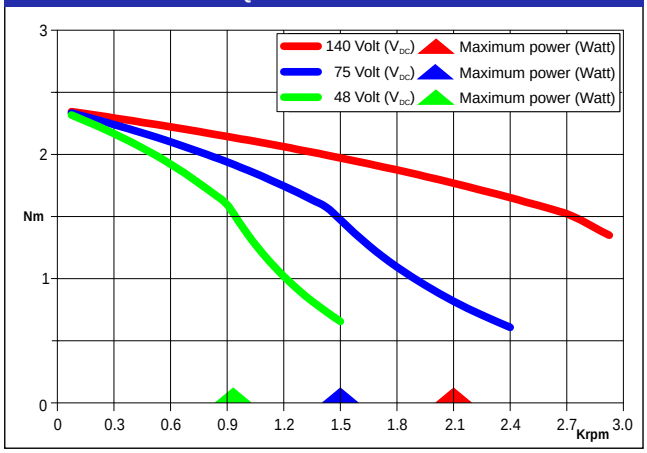


R.T.A. s.r.l. PAVIA (ITALY) SANYO DENKI CO.,Ltd (JAPAN)

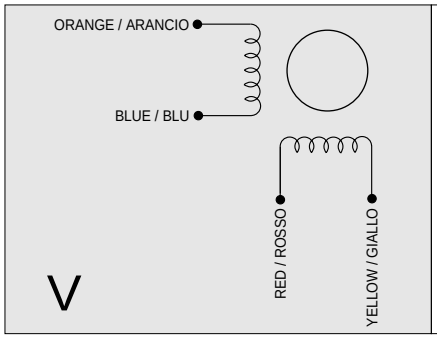

Suggested R.T.A. driver: NDC/A-NDC Series, HGD Series, PLUS Series.

# 103-H8221-62S41

SANYO DENKI
SANMOTION

## Dimensions (Unit:mm)

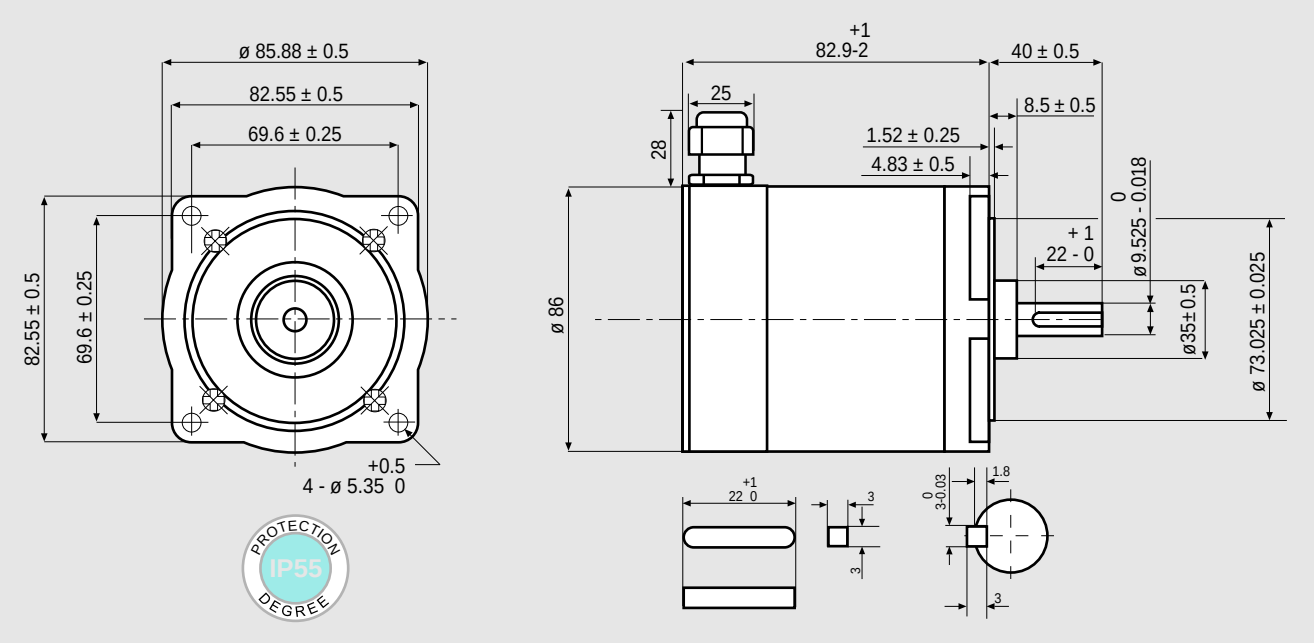


## FEATURES

| MODEL | | 103-H8221-62S41 |
|---|---|---|
| BASIC STEP ANGLE | | 1.8° ± 0.09° |
| BIPOLAR CURRENT | (Amp) | 6.0 |
| UNIPOLAR CURRENT | (Amp) | |
| RESISTANCE | (Ohm) | 0.3 |
| INDUCTANCE | (mH) | 1.65 |
| BIPOLAR HOLDING TORQUE | (Ncm) | 300 |
| UNIPOLAR HOLDING TORQUE | (Ncm) | |
| ROTOR INERTIA | (Kgm $^2$ x 10 $^{-7}$) | 1450 |
| THEORETICAL ACCELERATION | (rad x sec.$^{-2}$) | 20600 |
| BACK E.M.F. | (V/Krpm) | 50 |
| MASS | (Kg) | 1.75 |
| PROTECTION DEGREE | | IP55 |
| LEADS CODE | | V |

## TORQUE/SPEED CURVE

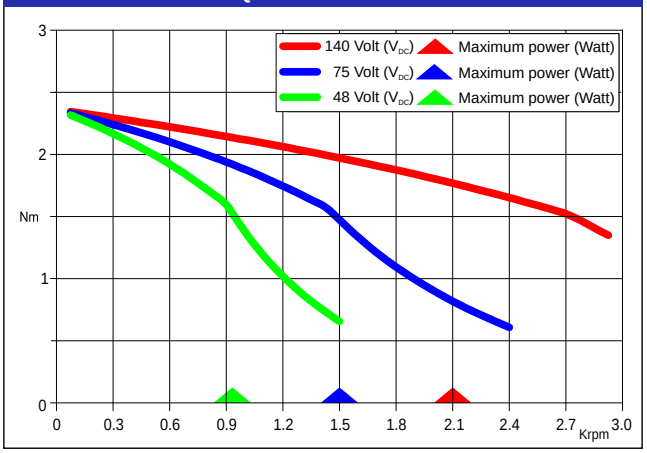

Suggested R.T.A. driver: NDC/A-NDC Series, HGD Series, PLUS Series.

R.T.A. s.r.l. PAVIA (ITALY) SANYO DENKI CO.,Ltd (JAPAN)

# 103-H8222-6340

SANYO DENKI
SANMOTION

## Dimensions (Unit:mm)

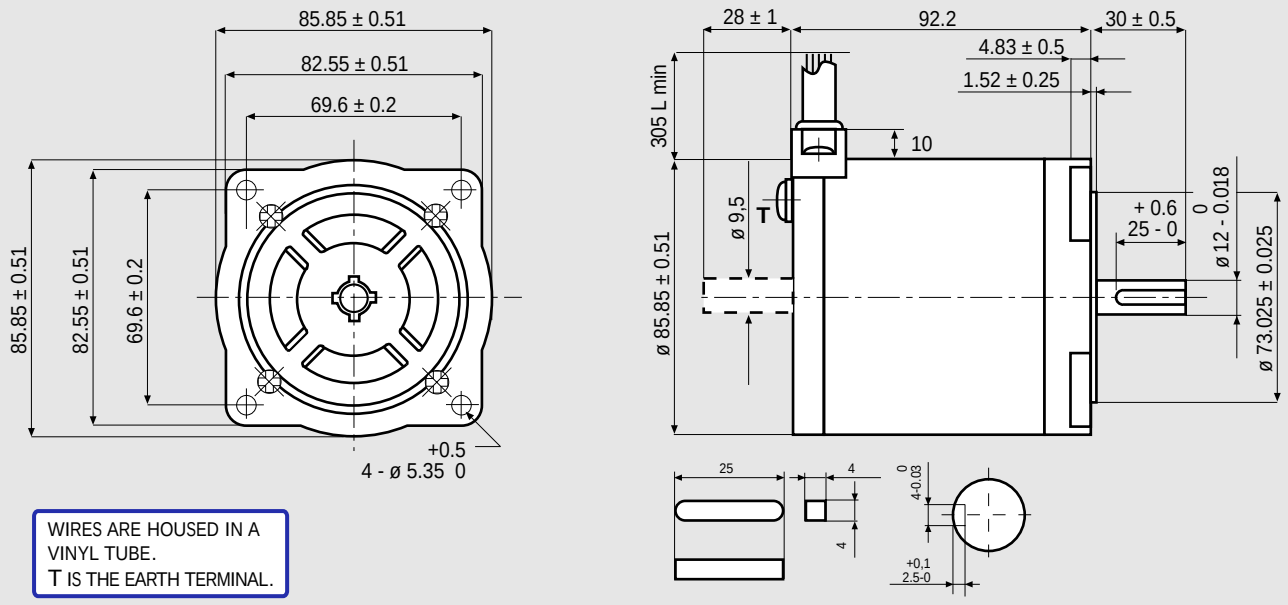


WIRES ARE HOUSED IN A VINYL TUBE.
T IS THE EARTH TERMINAL.

## FEATURES

| MODEL | | 103-H8222-6340 (103-H8222-6310) |
|---|---|---|
| BASIC STEP ANGLE | | 1.8° ± 0.09° |
| BIPOLAR CURRENT | (Amp) | 6.0 |
| UNIPOLAR CURRENT | (Amp) | |
| RESISTANCE | (Ohm) | 0.35 |
| INDUCTANCE | (mH) | 2.7 |
| BIPOLAR HOLDING TORQUE | (Ncm) | 560 |
| UNIPOLAR HOLDING TORQUE | (Ncm) | |
| ROTOR INERTIA | (Kgm $^2$ x 10 $^{-7}$) | 2900 |
| THEORETICAL ACCELERATION | (rad x sec.$^{-2}$) | 19300 |
| BACK E.M.F. | (V/Krpm) | 93 |
| MASS | (Kg) | 2.5 |
| PROTECTION DEGREE | | IP43 |
| LEADS CODE | | V |

Codes between brackets refer to double shaft models.
*Le sigle fra parentesi si riferiscono ai modelli bialbero.*

## TORQUE/SPEED CURVE

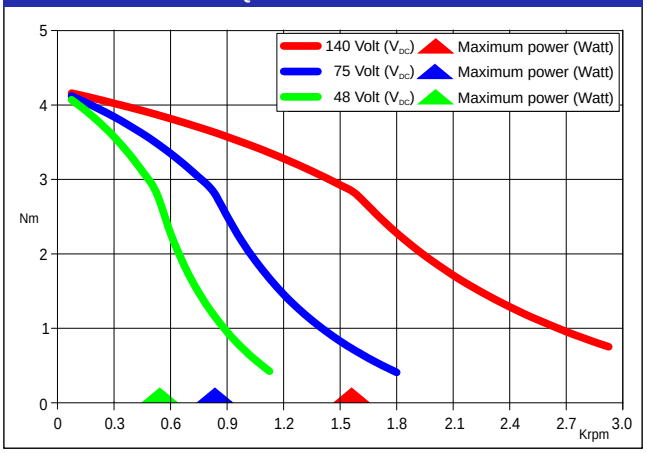


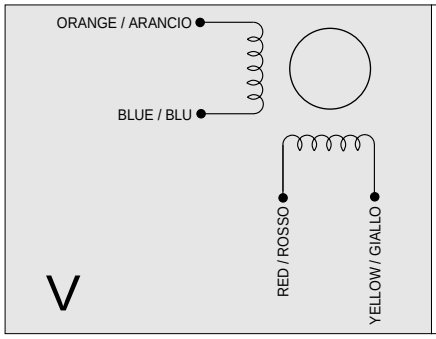

Suggested R.T.A. driver: NDC/A-NDC Series, HGD Series, PLUS Series.

SANYO DENKI CO.,Ltd (JAPAN)
R.T.A. s.r.l. PAVIA (ITALY)

# 103-H8223-6540

SANYO DENKI
SANMOTION

## Dimensions (Unit:mm)

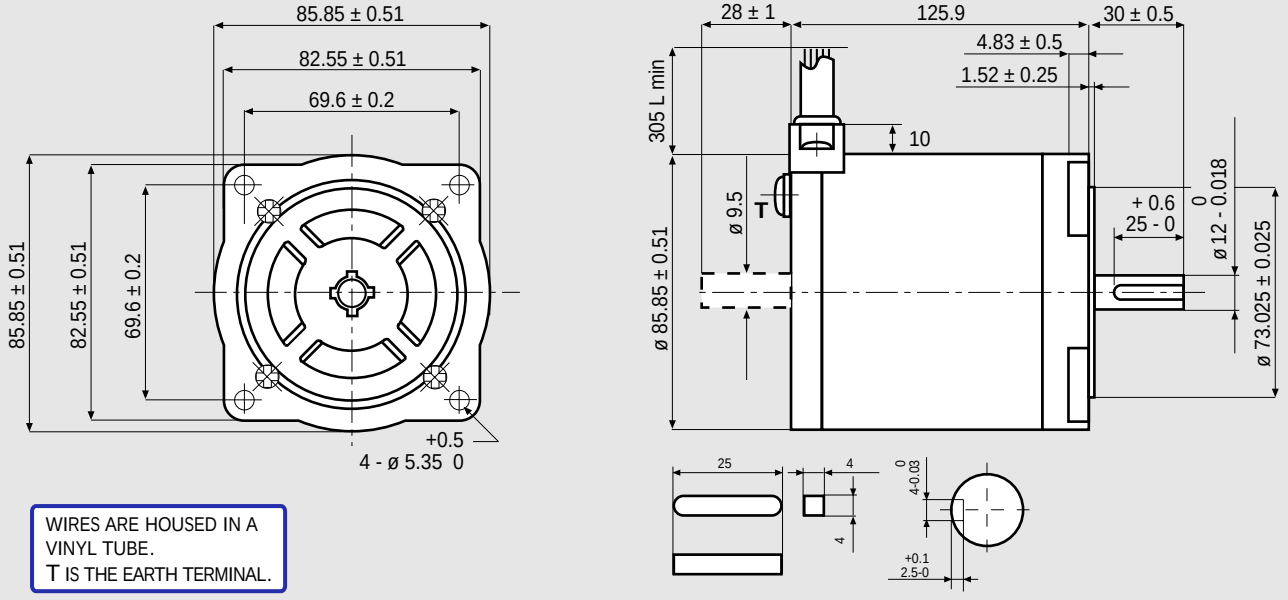


WIRES ARE HOUSED IN A VINYL TUBE.
T IS THE EARTH TERMINAL.

## FEATURES

| MODEL | | 103-H8223-6540 (103-H8223-6510) |
|---|---|---|
| BASIC STEP ANGLE | | 1.8° ± 0.09° |
| BIPOLAR CURRENT | (Amp) | 9.0 |
| UNIPOLAR CURRENT | (Amp) | |
| RESISTANCE | (Ohm) | 0.2 |
| INDUCTANCE | (mH) | 1.4 |
| BIPOLAR HOLDING TORQUE | (Ncm) | 790 |
| UNIPOLAR HOLDING TORQUE | (Ncm) | |
| ROTOR INERTIA | (Kgm $^2$ x 10 $^{-7}$) | 4350 |
| THEORETICAL ACCELERATION | (rad x sec.$^{-2}$) | 18200 |
| BACK E.M.F. | (V/Krpm) | 88 |
| MASS | (Kg) | 3.5 |
| PROTECTION DEGREE | | IP43 |
| LEADS CODE | | V |

Codes between brackets refer to double shaft models.
*Le sigle fra parentesi si riferiscono ai modelli bialbero.*

## TORQUE/SPEED CURVE

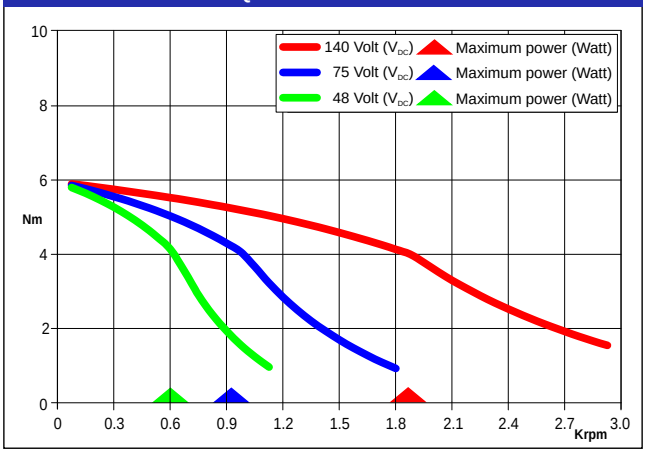


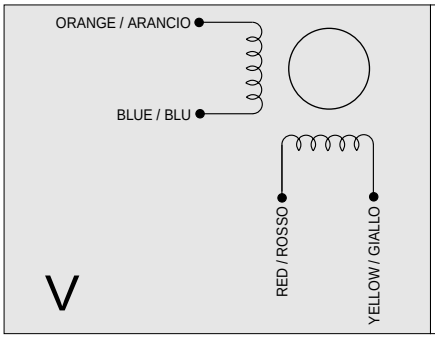

## Suggested R.T.A. driver: PLUS Series.




R.T.A. s.r.l. PAVIA (ITALY) SANYO DENKI CO.,Ltd (JAPAN)

# SM 2861-5055

SANYO DENKI
SANMOTION

## Dimensions (Unit:mm)

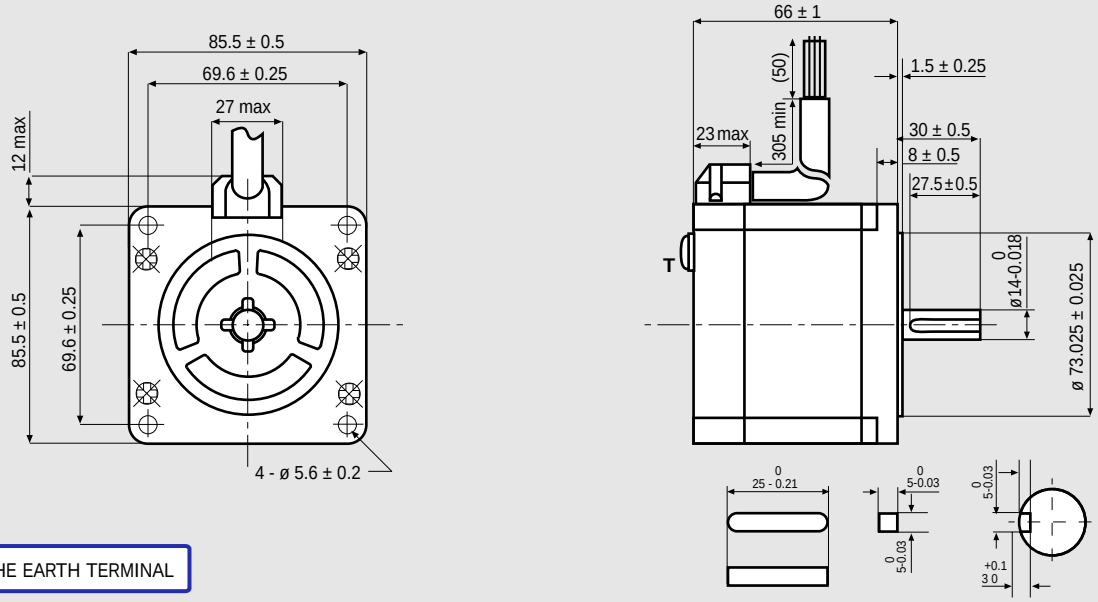


T IS THE EARTH TERMINAL

## FEATURES

| MODEL | | SM 2861-5055 (SM 2861-5025) |
|---|---|---|
| BASIC STEP ANGLE | | 1.8° ± 0.09° |
| BIPOLAR CURRENT | (Amp) | 2.0 |
| RESISTANCE | (Ohm) | 2.2 |
| INDUCTANCE | (mH) | 15 |
| BIPOLAR HOLDING TORQUE | (Ncm) | 360 |
| ROTOR INERTIA | (Kgm $^2$ x 10 $^{-7}$) | 1480 |
| THEORETICAL ACCELERATION | (rad x sec.$^{-2}$) | 24300 |
| BACK E.M.F. | (V/Krpm) | 180 |
| MASS | (Kg) | 1.7 |
| INTERNATIONAL STANDARDS | | UL, CSA |
| INSULATION VOLTAGE | (V) | 250 VAC (350 VDC) |
| PROTECTION DEGREE | | IP43-F |
| LEADS CODE | | V |

Codes between brackets refer to double shaft models.
*Le sigle fra parentesi si riferiscono ai modelli bialbero.*

## TORQUE/SPEED CURVE

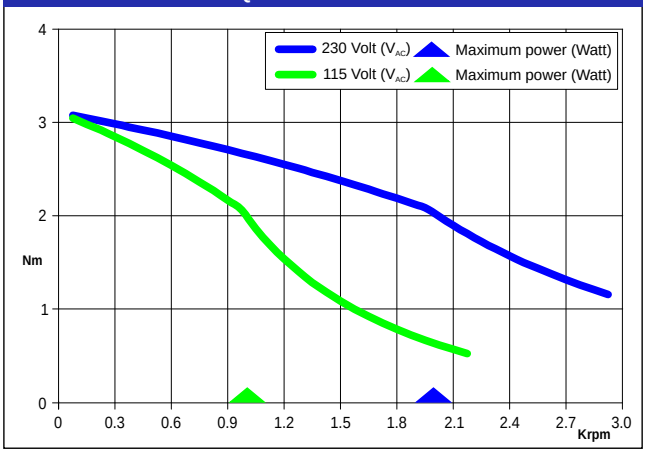


R.T.A. s.r.l. PAVIA (ITALY) SANYO DENKI CO.,Ltd (JAPAN)

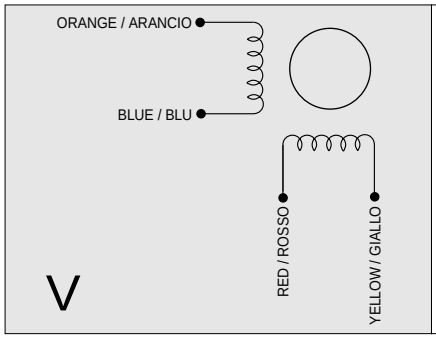

## Suggested R.T.A. driver: X-PLUS B Series, X-MIND Series.

# SM 2861-5255

SANYO DENKI
SANMOTION

## Dimensions (Unit:mm)

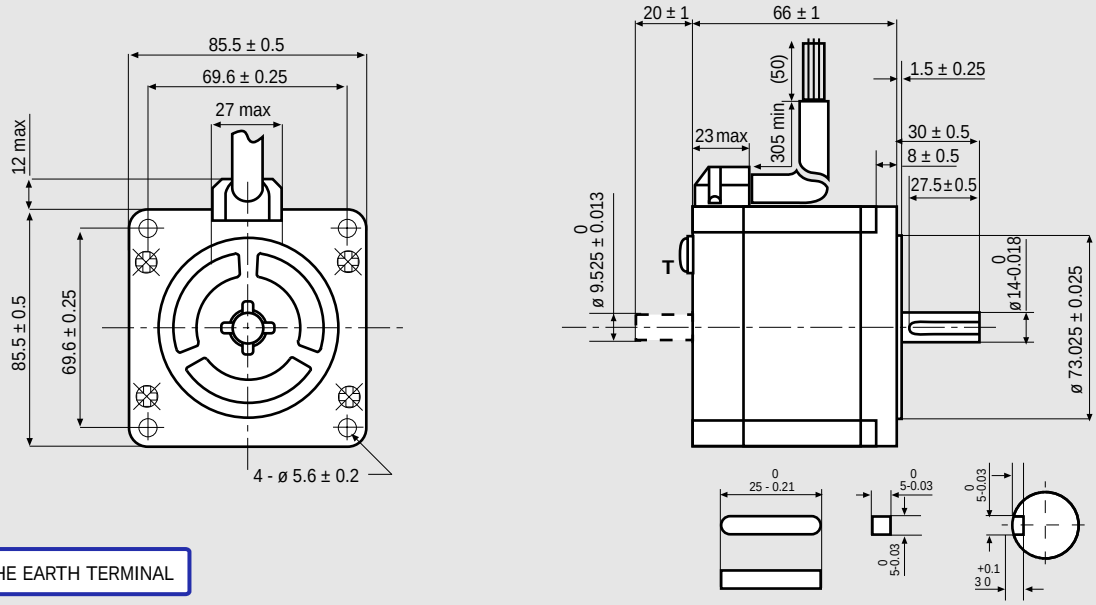


T IS THE EARTH TERMINAL

## FEATURES

| MODEL | | SM 2861-5255 (SM 2861-5225) |
|---|---|---|
| BASIC STEP ANGLE | | 1.8° ± 0.09° |
| BIPOLAR CURRENT | (Amp) | 6.0 |
| RESISTANCE | (Ohm) | 0.29 |
| INDUCTANCE | (mH) | 1.7 |
| BIPOLAR HOLDING TORQUE | (Ncm) | 360 |
| ROTOR INERTIA | (Kgm $^2$ x 10 $^{-7}$) | 1480 |
| THEORETICAL ACCELERATION | (rad x sec.$^{-2}$) | 24300 |
| BACK E.M.F. | (V/Krpm) | 60 |
| MASS | (Kg) | 1.7 |
| INTERNATIONAL STANDARDS | | UL, CSA |
| INSULATION VOLTAGE | (V) | 250 VAC (350 VDC) |
| PROTECTION DEGREE | | IP43-F |
| LEADS CODE | | V |

Codes between brackets refer to double shaft models.
*Le sigle fra parentesi si riferiscono ai modelli bialbero.*

## TORQUE/SPEED CURVE

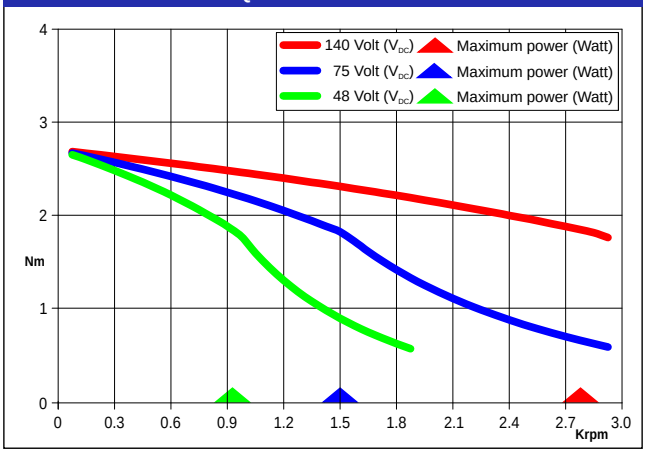


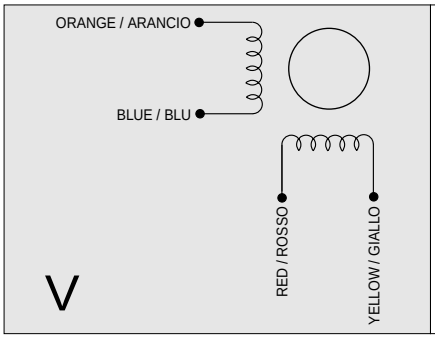

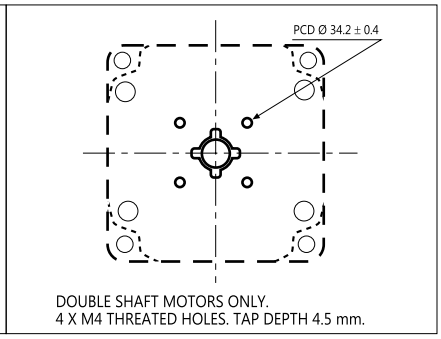


## Suggested R.T.A. driver: NDC/A-NDC Series, ADW Series, HGD Series, PLUS Series.

R.T.A. s.r.l. PAVIA (ITALY) SANYO DENKI CO.,Ltd (JAPAN)

# SM 2862-5055

SANYO DENKI
SANMOTION

## Dimensions (Unit:mm)

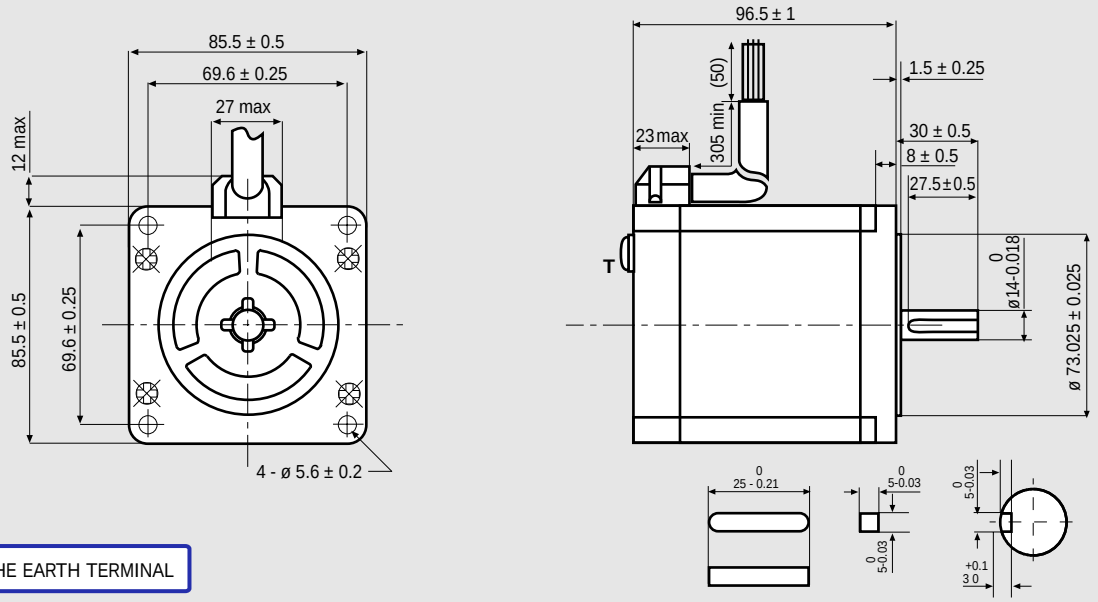


T IS THE EARTH TERMINAL

## FEATURES

| MODEL | | SM 2862-5055 |
|---|---|---|
| BASIC STEP ANGLE | | 1.8° ± 0.09° |
| BIPOLAR CURRENT | (Amp) | 2.0 |
| RESISTANCE | (Ohm) | 3.2 |
| INDUCTANCE | (mH) | 25 |
| BIPOLAR HOLDING TORQUE | (Ncm) | 700 |
| ROTOR INERTIA | (Kgm $^2$ x 10 $^{-7}$) | 3000 |
| THEORETICAL ACCELERATION | (rad x sec.$^{-2}$) | 23300 |
| BACK E.M.F. | (V/Krpm) | 350 |
| MASS | (Kg) | 2.9 |
| INTERNATIONAL STANDARDS | | UL, CSA |
| INSULATION VOLTAGE | (V) | 250 VAC (350 VDC) |
| PROTECTION DEGREE | | IP43-F |
| LEADS CODE | | V |

## TORQUE/SPEED CURVE

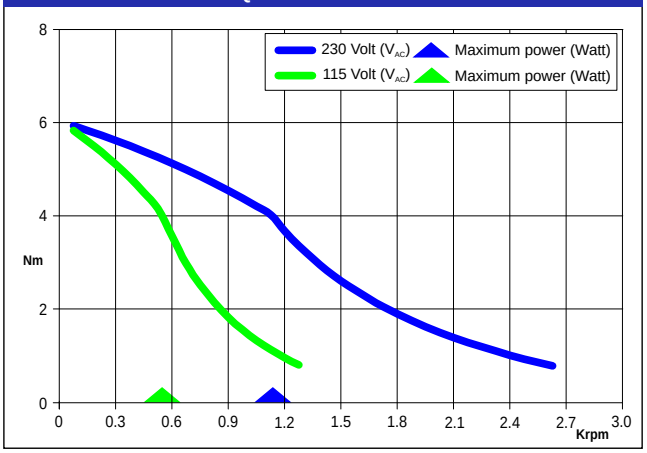


R.T.A. s.r.l. PAVIA (ITALY) SANYO DENKI CO.,Ltd (JAPAN)

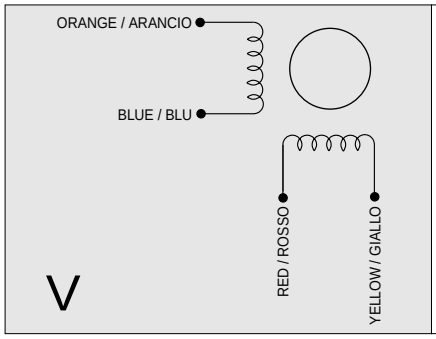

Suggested R.T.A. driver: X-PLUS B Series, X-MIND Series.

# SM 2862-5155

SANYO DENKI
SANMOTION

## Dimensions (Unit:mm)

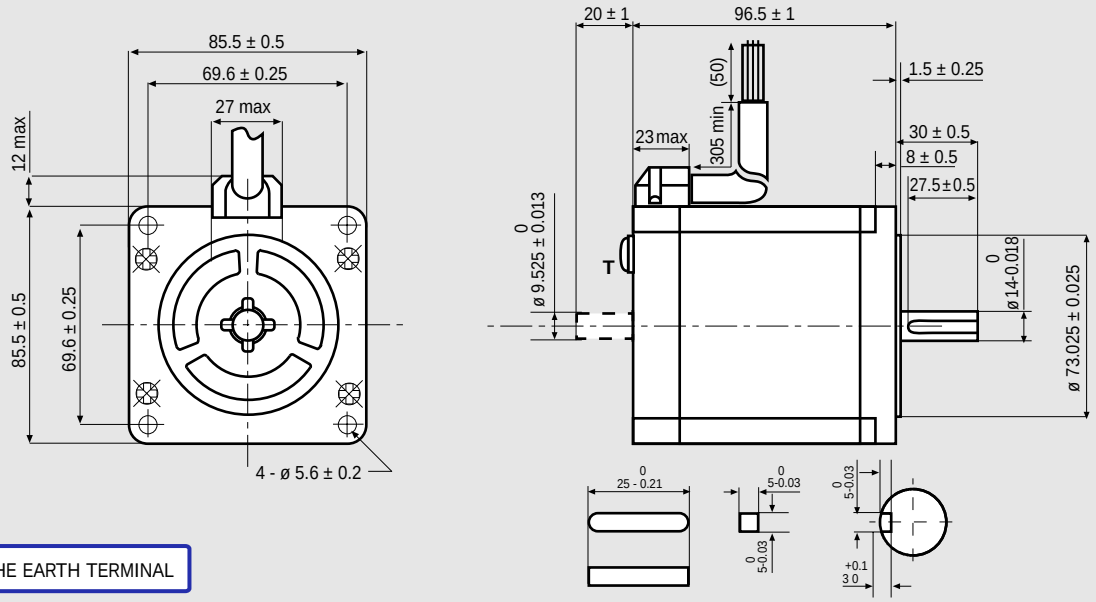


T IS THE EARTH TERMINAL

## FEATURES

| MODEL | | SM 2862-5155 (SM 2862-5125) |
|---|---|---|
| BASIC STEP ANGLE | | 1.8° ± 0.09° |
| BIPOLAR CURRENT | (Amp) | 4.0 |
| RESISTANCE | (Ohm) | 0.83 |
| INDUCTANCE | (mH) | 6.4 |
| BIPOLAR HOLDING TORQUE | (Ncm) | 700 |
| ROTOR INERTIA | (Kgm $^2$ x 10 $^{-7}$) | 3000 |
| THEORETICAL ACCELERATION | (rad x sec.$^{-2}$) | 23300 |
| BACK E.M.F. | (V/Krpm) | 175 |
| MASS | (Kg) | 2.9 |
| INTERNATIONAL STANDARDS | | UL, CSA |
| INSULATION VOLTAGE | (V) | 250 VAC (350 VDC) |
| PROTECTION DEGREE | | IP43-F |
| LEADS CODE | | V |

Codes between brackets refer to double shaft models.
*Le sigle fra parentesi si riferiscono ai modelli bialbero.*

## TORQUE/SPEED CURVE

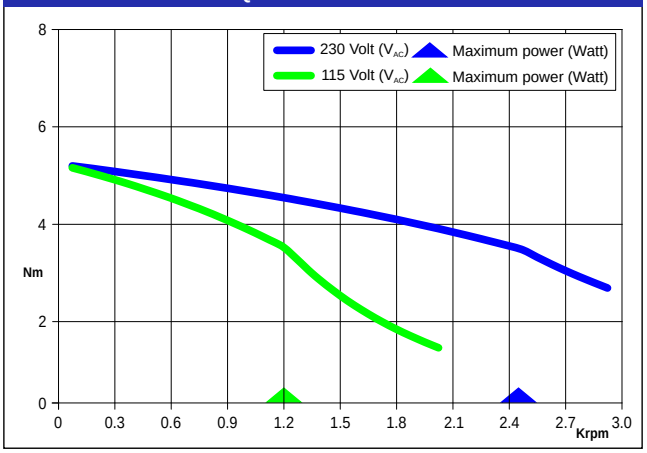


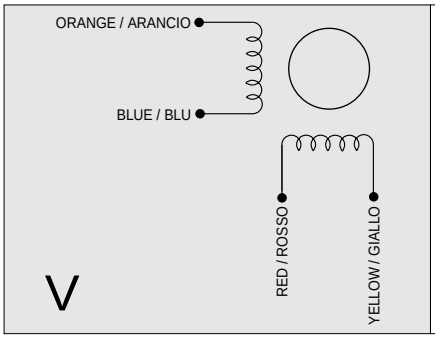

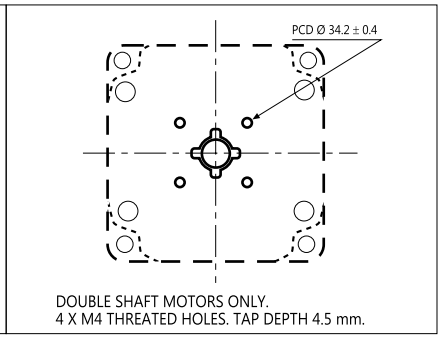


## Suggested R.T.A. driver: X-PLUS B Series, X-MIND Series.




R.T.A. s.r.l. PAVIA (ITALY) SANYO DENKI CO.,Ltd (JAPAN)

# SM 2862-5156

SANYO DENKI
SANMOTION

## Dimensions (Unit:mm)

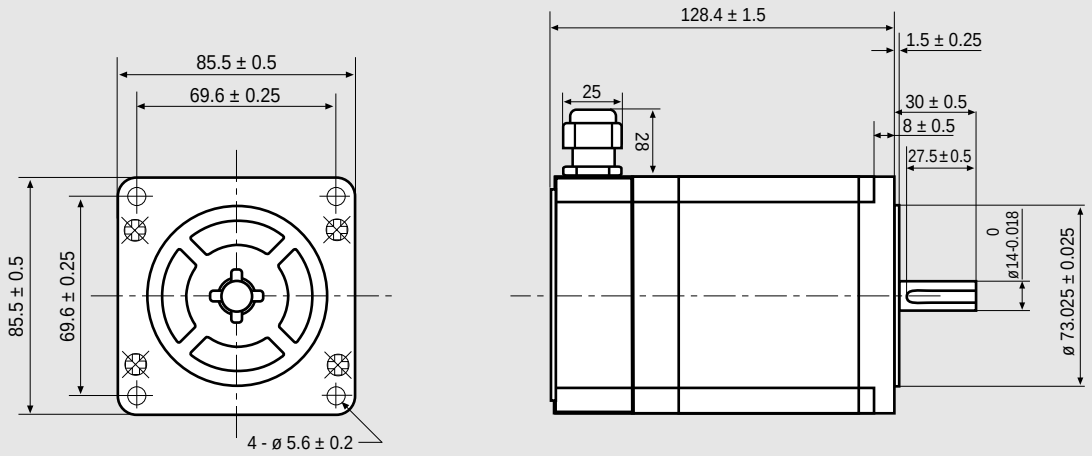


## FEATURES

| MODEL | | SM 2862-5156 |
|---|---|---|
| BASIC STEP ANGLE | | 1.8° ± 0.09° |
| BIPOLAR CURRENT | (Amp) | 4.0 |
| RESISTANCE | (Ohm) | 0.83 |
| INDUCTANCE | (mH) | 6.4 |
| BIPOLAR HOLDING TORQUE | (Ncm) | 700 |
| ROTOR INERTIA | (Kgm $^2$ x 10 $^{-7}$) | 3000 |
| THEORETICAL ACCELERATION | (rad x sec.$^{-2}$) | 23300 |
| BACK E.M.F. | (V/Krpm) | 175 |
| MASS | (Kg) | 2.9 |
| INTERNATIONAL STANDARDS | | UL, CSA |
| INSULATION VOLTAGE | (V) | 250 VAC (350 VDC) |
| PROTECTION DEGREE | | IP43-F |
| LEADS CODE | | V |

## TORQUE/SPEED CURVE

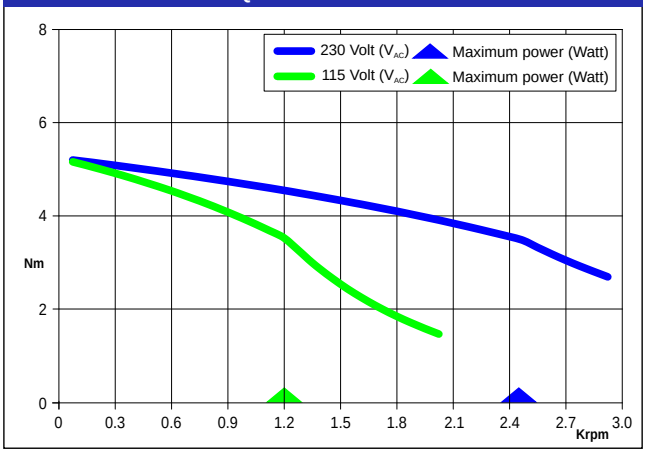


R.T.A. s.r.l. PAVIA (ITALY) SANYO DENKI CO.,Ltd (JAPAN)

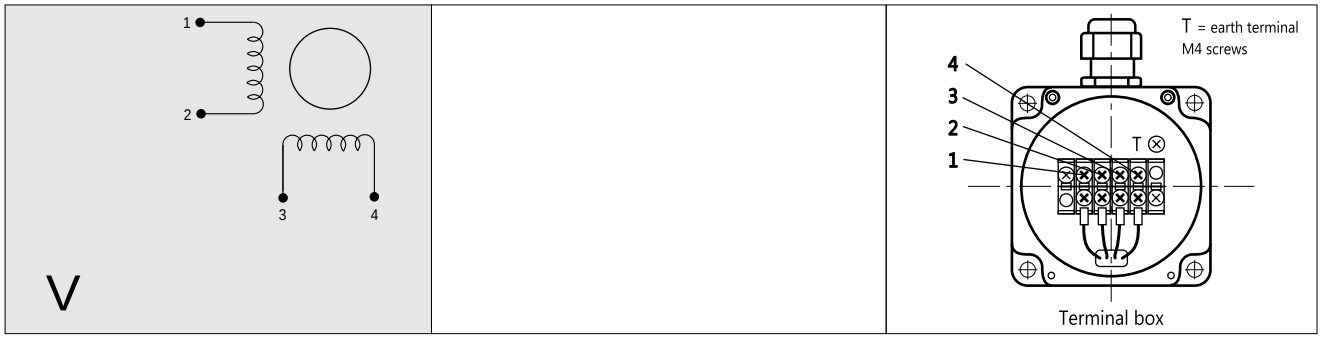


Suggested R.T.A. driver: X-PLUS B Series, X-MIND Series.

# SM 2862-5255

SANYO DENKI
SANMOTION

## Dimensions (Unit:mm)

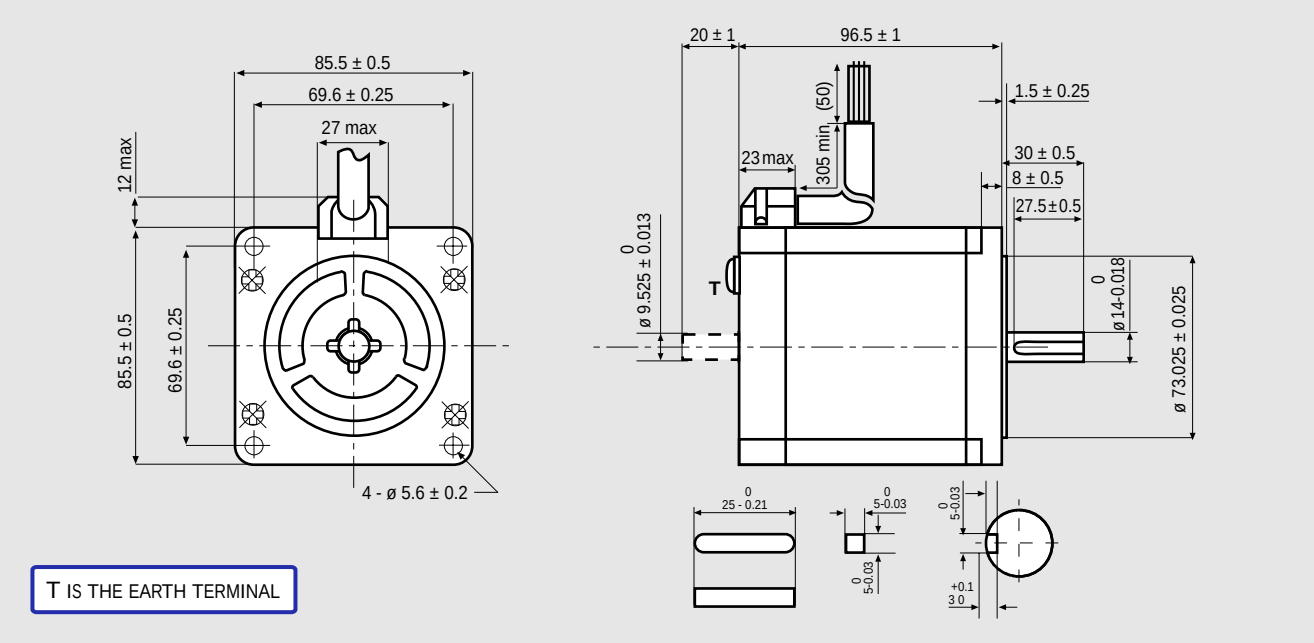


T IS THE EARTH TERMINAL

## FEATURES

| MODEL | | SM 2862-5255 (SM 2862-5225) |
|---|---|---|
| BASIC STEP ANGLE | | 1.8° ± 0.09° |
| BIPOLAR CURRENT | (Amp) | 6.0 |
| RESISTANCE | (Ohm) | 0.36 |
| INDUCTANCE | (mH) | 2.8 |
| BIPOLAR HOLDING TORQUE | (Ncm) | 700 |
| ROTOR INERTIA | (Kgm $^2$ x 10 $^{-7}$) | 3000 |
| THEORETICAL ACCELERATION | (rad x sec.$^{-2}$) | 23300 |
| BACK E.M.F. | (V/Krpm) | 120 |
| MASS | (Kg) | 2.9 |
| INTERNATIONAL STANDARDS | | UL, CSA |
| INSULATION VOLTAGE | (V) | 250 VAC (350 VDC) |
| PROTECTION DEGREE | | IP43-F |
| LEADS CODE | | V |

Codes between brackets refer to double shaft models.
*Le sigle fra parentesi si riferiscono ai modelli bialbero.*

## TORQUE/SPEED CURVE

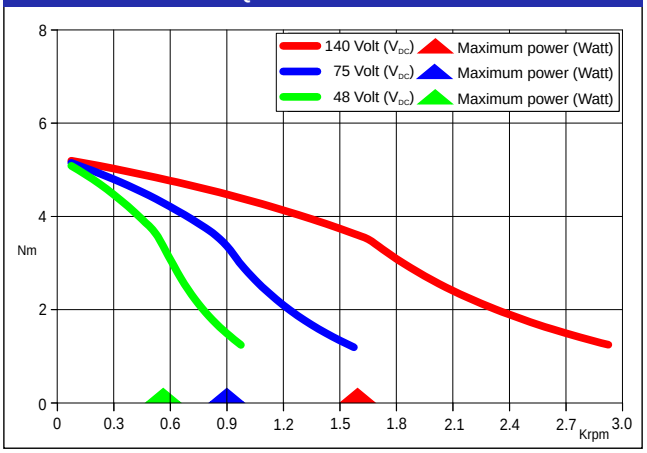


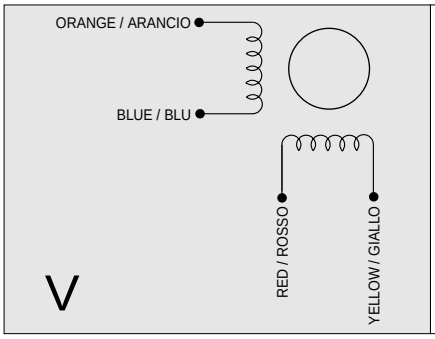

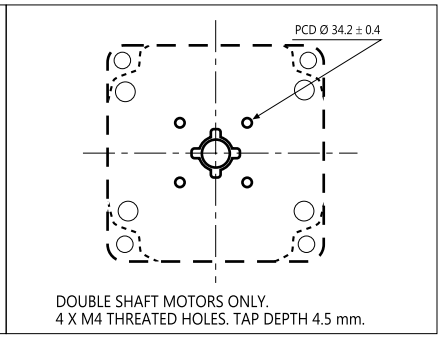


## Suggested R.T.A. driver: NDC/A-NDC Series, ADW Series, HGD Series, PLUS Series.




R.T.A. s.r.l. PAVIA (ITALY) SANYO DENKI CO.,Ltd (JAPAN)

# SM 2863-5155

SANYO DENKI
SANMOTION

## Dimensions (Unit:mm)

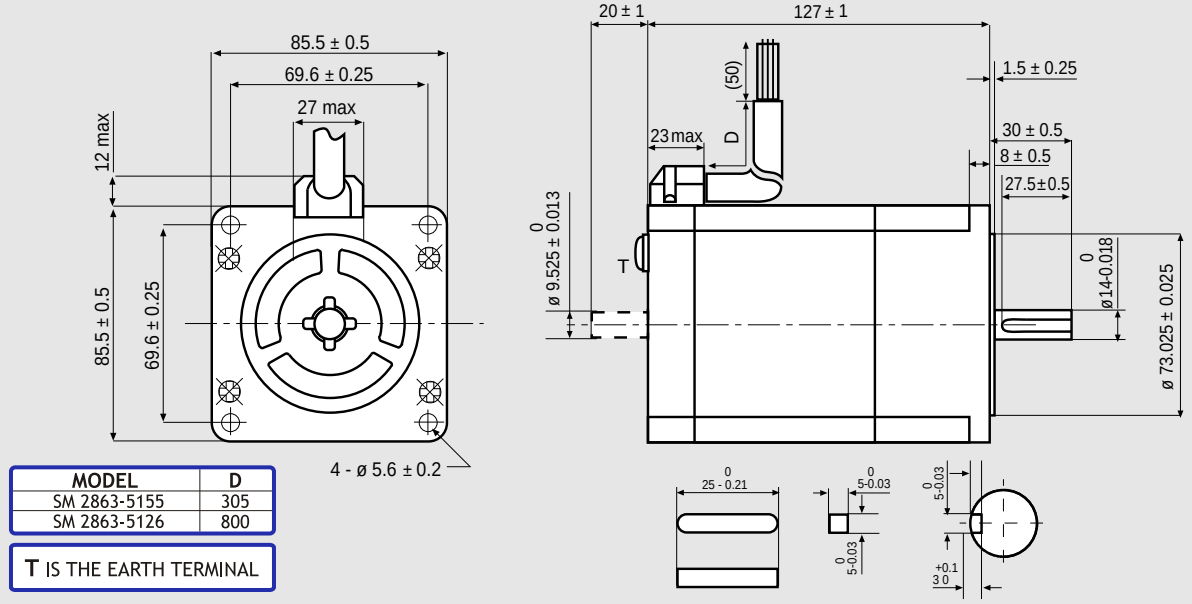


| MODEL | D |
|---|---|
| SM 2863-5155 | 305 |
| SM 2863-5126 | 800 |

T IS THE EARTH TERMINAL

## FEATURES

| MODEL | | SM 2863-5155 (SM 2863-5126) |
|---|---|---|
| BASIC STEP ANGLE | | 1.8° ± 0.09° |
| BIPOLAR CURRENT | (Amp) | 4.0 |
| RESISTANCE | (Ohm) | 1.0 |
| INDUCTANCE | (mH) | 7.9 |
| BIPOLAR HOLDING TORQUE | (Ncm) | 920 |
| ROTOR INERTIA | (Kgm $^2$ x 10 $^{-7}$) | 4500 |
| THEORETICAL ACCELERATION | (rad x sec.$^{-2}$) | 20500 |
| BACK E.M.F. | (V/Krpm) | 241 |
| MASS | (Kg) | 4 |
| INTERNATIONAL STANDARDS | | UL, CSA |
| INSULATION VOLTAGE | (V) | 250 VAC (350 VDC) |
| PROTECTION DEGREE | | IP43-F |
| LEADS CODE | | V |

Codes between brackets refer to double shaft models.
*Le sigle fra parentesi si riferiscono ai modelli bialbero.*

## TORQUE/SPEED CURVE

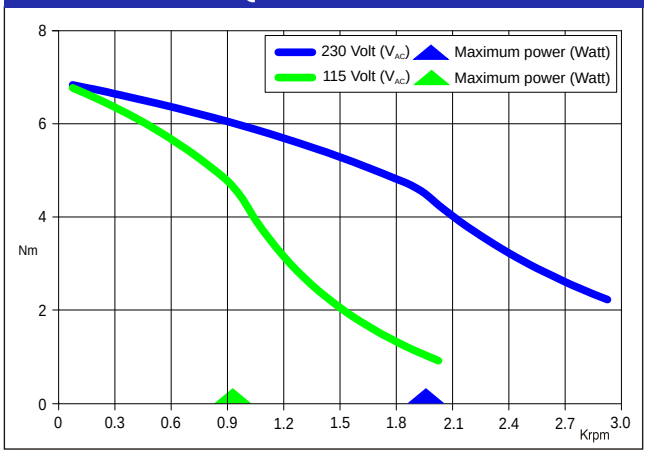


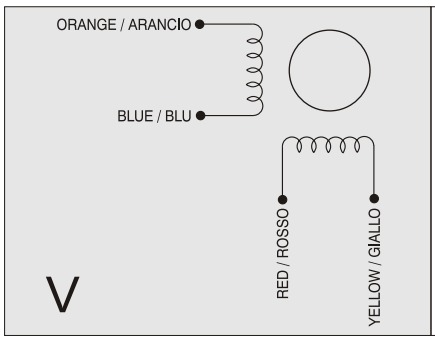

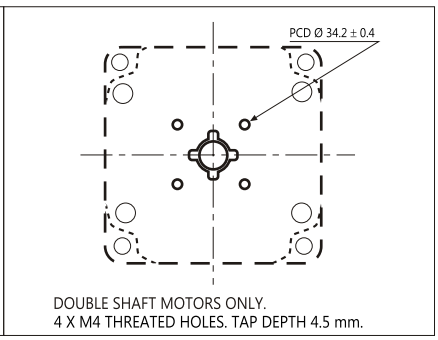


## Suggested R.T.A. driver: X-PLUS B Series, X-MIND Series.

R.T.A. s.r.l. PAVIA (ITALY) SANYO DENKI CO.,Ltd (JAPAN)

# SM 2863-5255

SANYO DENKI
SANMOTION

## Dimensions (Unit:mm)

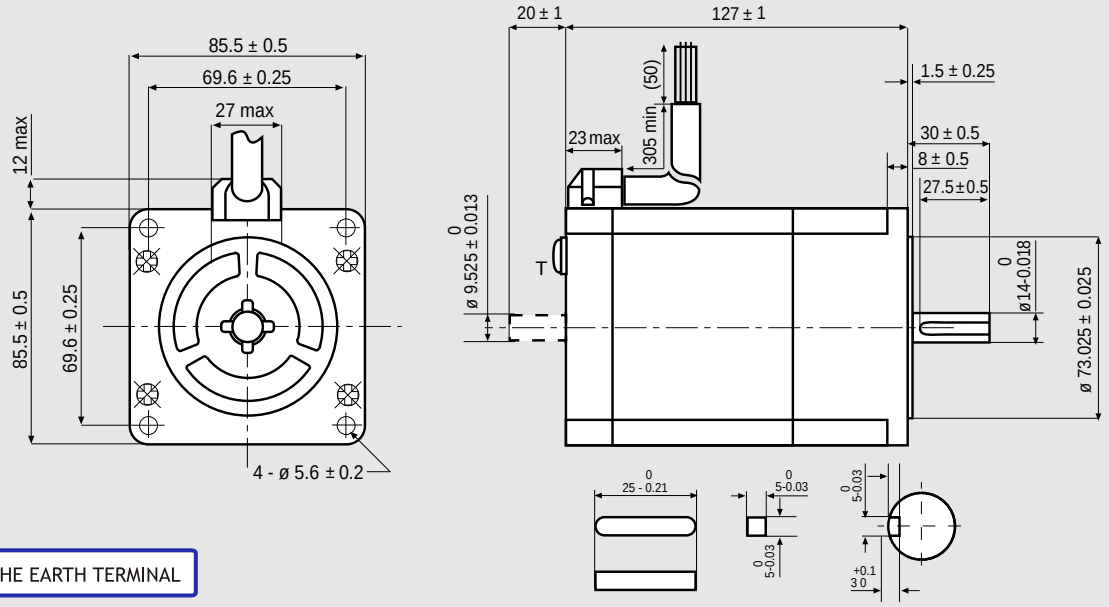


T IS THE EARTH TERMINAL

## FEATURES

| MODEL | | SM 2863-5255 (SM 2863-5225) |
|---|---|---|
| BASIC STEP ANGLE | | 1.8° ± 0.09° |
| BIPOLAR CURRENT | (Amp) | 6.0 |
| RESISTANCE | (Ohm) | 0.46 |
| INDUCTANCE | (mH) | 3.8 |
| BIPOLAR HOLDING TORQUE | (Ncm) | 920 |
| ROTOR INERTIA | (Kgm $^2$ x 10 $^{-7}$) | 4500 |
| THEORETICAL ACCELERATION | (rad x sec.$^{-2}$) | 20500 |
| BACK E.M.F. | (V/Krpm) | 161 |
| MASS | (Kg) | 4 |
| INTERNATIONAL STANDARDS | | UL, CSA |
| INSULATION VOLTAGE | (V) | 250 VAC (350 VDC) |
| PROTECTION DEGREE | | IP43-F |
| LEADS CODE | | V |

Codes between brackets refer to double shaft models.
*Le sigle fra parentesi si riferiscono ai modelli bialbero.*

## TORQUE/SPEED CURVE

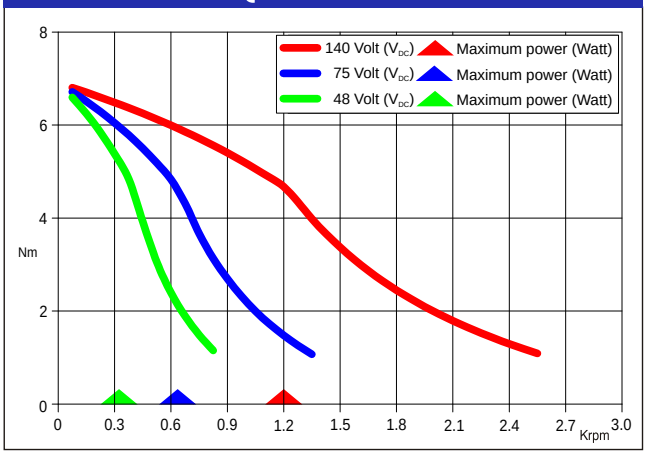


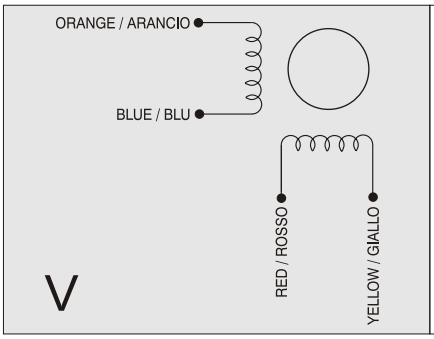

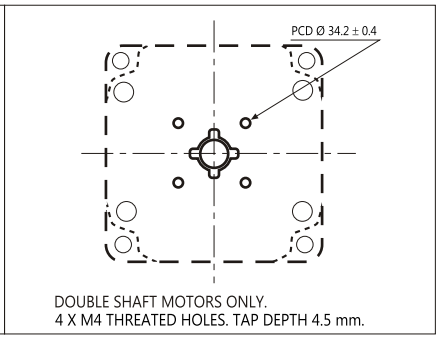


DOUBLE SHAFT MOTORS ONLY.
4 X M4 THREATED HOLES. TAP DEPTH 4.5 mm.

## Suggested R.T.A. driver: NDC/A-NDC Series, ADW Series, HGD Series,PLUS Series.

R.T.A. s.r.l. PAVIA (ITALY) SANYO DENKI CO.,Ltd (JAPAN)

# 103-8932-6451

SANYO DENKI
SANMOTION

## Dimensions (Unit:mm)

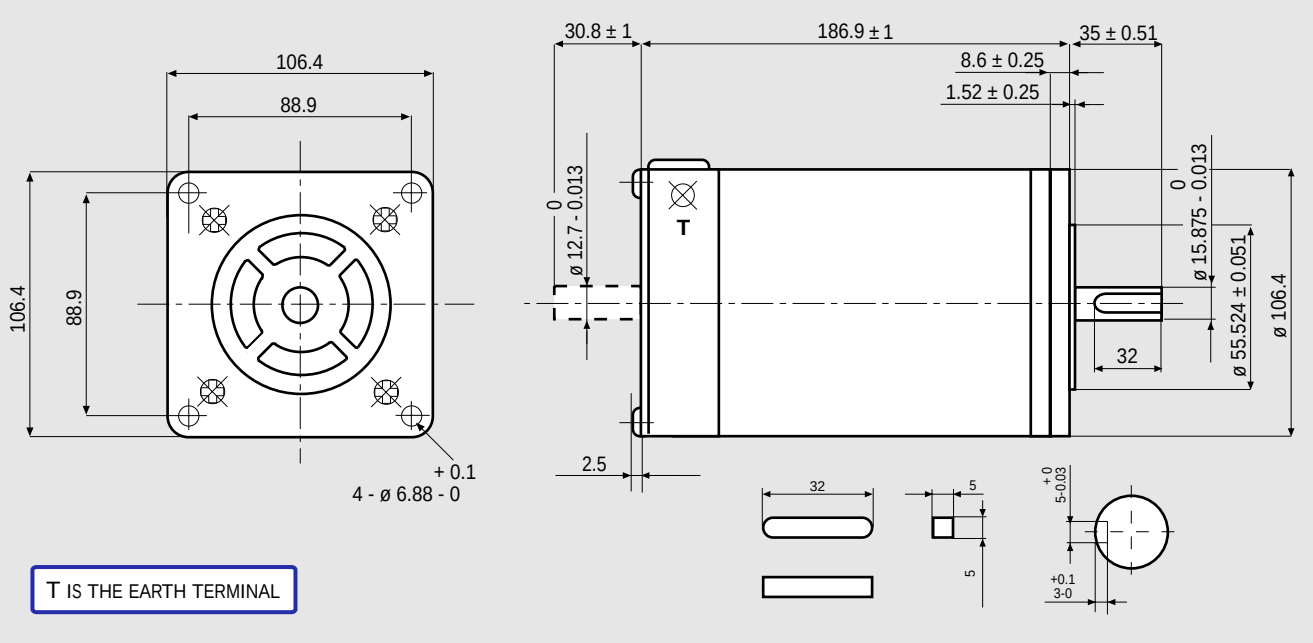


## FEATURES

| MODEL | | 103-8932-6451 (103-8932-6421) |
|---|---|---|
| BASIC STEP ANGLE | | 1.8° ± 0.09° |
| BIPOLAR CURRENT | (Amp) | 12.7 |
| UNIPOLAR CURRENT | (Amp) | 9.0 |
| RESISTANCE | (Ohm) | 0.28 |
| INDUCTANCE | (mH) | 2.4 |
| BIPOLAR HOLDING TORQUE | (Ncm) | 1330 |
| UNIPOLAR HOLDING TORQUE | (Ncm) | 1020 |
| ROTOR INERTIA | (Kgm $^2$ x 10 $^{-7}$) | 8000 |
| THEORETICAL ACCELERATION | (rad x sec.$^{-2}$) | 16500 |
| BACK E.M.F. | (V/Krpm) | 85 |
| MASS | (Kg) | 7.0 |
| PROTECTION DEGREE | | IP43 |
| LEADS CODE | | III |

Codes between brackets refer to double shaft models.
*Le sigle fra parentesi si riferiscono ai modelli bialbero.*

## TORQUE/SPEED CURVE

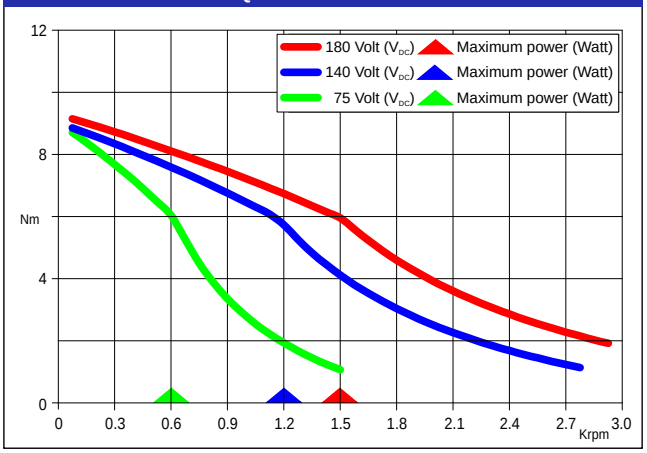


R.T.A. s.r.l. PAVIA (ITALY) SANYO DENKI CO.,Ltd (JAPAN)

## Suggested R.T.A. driver: contact R.T.A.

# 103-8960-6551

SANYO DENKI
SANMOTION

## Dimensions (Unit:mm)

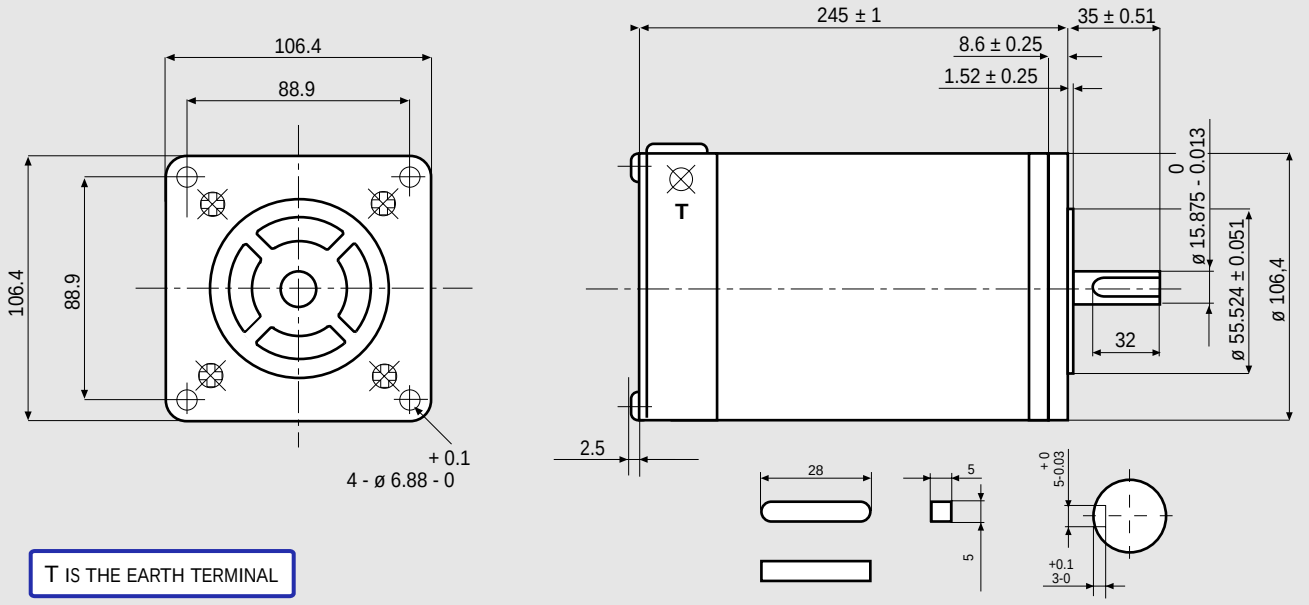


## FEATURES

| MODEL | | 103-8960-6551 |
|---|---|---|
| BASIC STEP ANGLE | | 1.8° ± 0.09° |
| BIPOLAR CURRENT | (Amp) | 14.1 |
| UNIPOLAR CURRENT | (Amp) | 10 |
| RESISTANCE | (Ohm) | 0.28 |
| INDUCTANCE | (mH) | 3.0 |
| BIPOLAR HOLDING TORQUE | (Ncm) | 2060 |
| UNIPOLAR HOLDING TORQUE | (Ncm) | 1580 |
| ROTOR INERTIA | (Kgm $^2$ x 10 $^{-7}$) | 11500 |
| THEORETICAL ACCELERATION | (rad x sec.$^{-2}$) | 17900 |
| BACK E.M.F. | (V/Krpm) | 120 |
| MASS | (Kg) | 10.5 |
| PROTECTION DEGREE | | IP43 |
| LEADS CODE | | III |

## TORQUE/SPEED CURVE

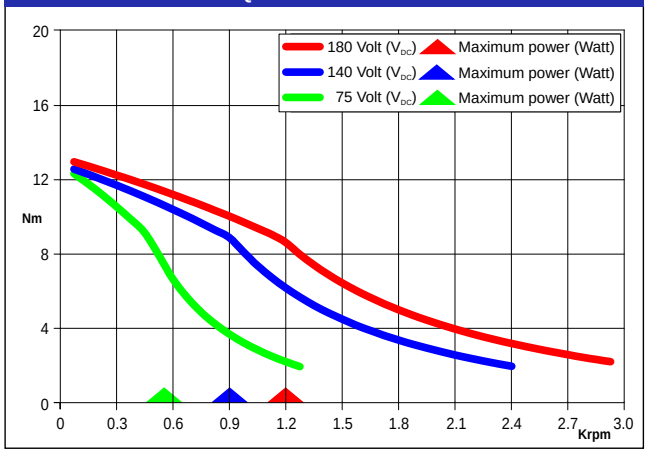


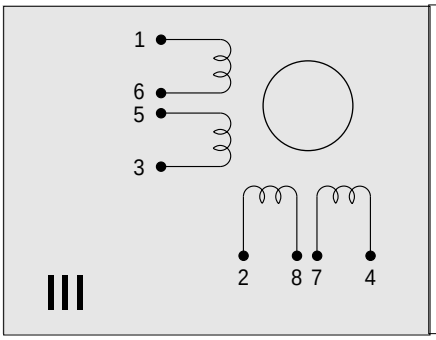

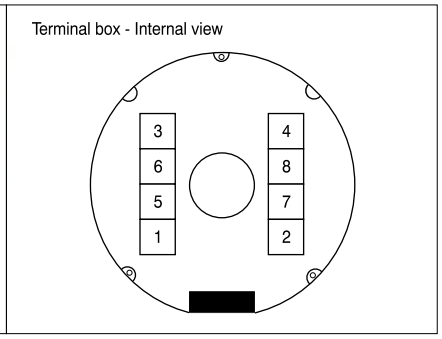


## Suggested R.T.A. driver: contact R.T.A.

R.T.A. s.r.l. PAVIA (ITALY) SANYO DENKI CO.,Ltd (JAPAN)

# 103-H89222-6341

SANYO DENKI
SANMOTION

## Dimensions (Unit:mm)

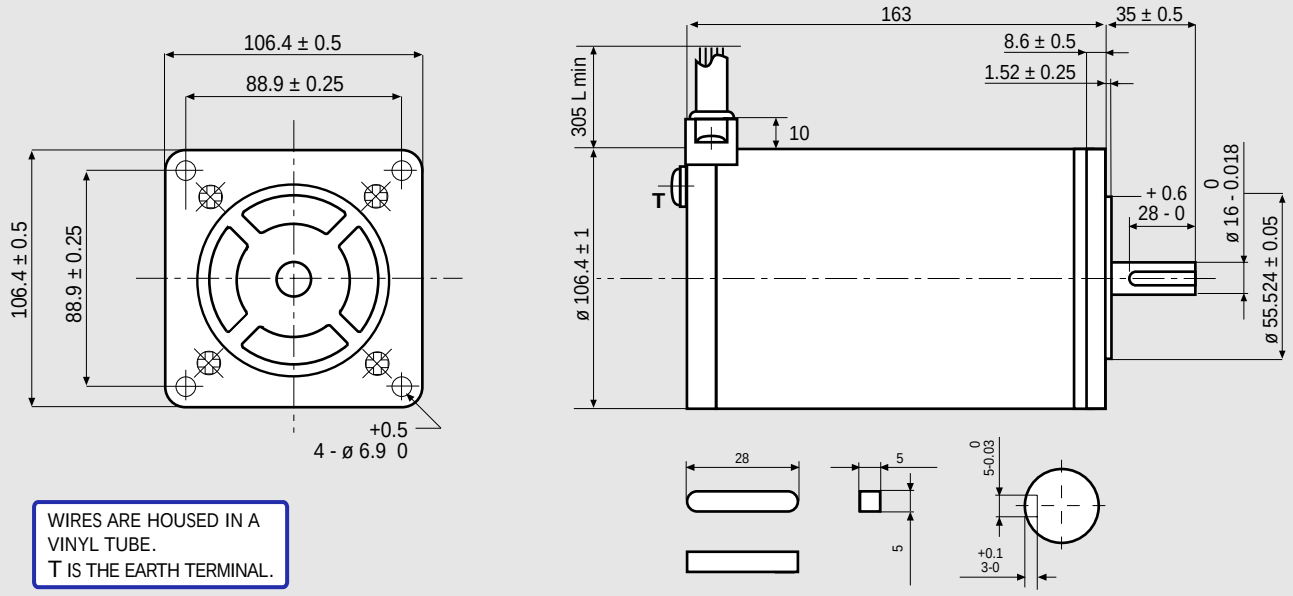


WIRES ARE HOUSED IN A VINYL TUBE.
T IS THE EARTH TERMINAL.

## FEATURES

| MODEL | | 103-H89222-6341 (103-H89222-6311) |
|---|---|---|
| BASIC STEP ANGLE | | 1.8° ± 0.09° |
| BIPOLAR CURRENT | (Amp) | 6.0 |
| UNIPOLAR CURRENT | (Amp) | |
| RESISTANCE | (Ohm) | 0.45 |
| INDUCTANCE | (mH) | 5.4 |
| BIPOLAR HOLDING TORQUE | (Ncm) | 1620 |
| UNIPOLAR HOLDING TORQUE | (Ncm) | |
| ROTOR INERTIA | (Kgm $^2$ x 10 $^{-7}$) | 14650 |
| THEORETICAL ACCELERATION | (rad x sec.$^{-2}$) | 11100 |
| BACK E.M.F. | (V/Krpm) | 270 |
| MASS | (Kg) | 7 |
| PROTECTION DEGREE | | IP43 |
| LEADS CODE | | V |

Codes between brackets refer to double shaft models.
*Le sigle fra parentesi si riferiscono ai modelli bialbero.*

## TORQUE/SPEED CURVE

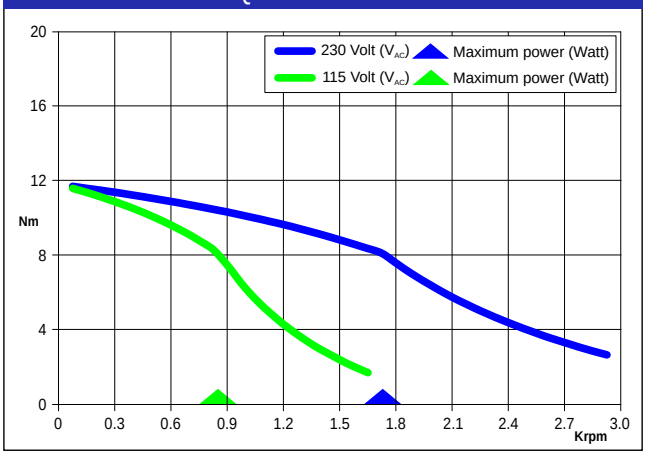


R.T.A. s.r.l. PAVIA (ITALY) SANYO DENKI CO.,Ltd (JAPAN)

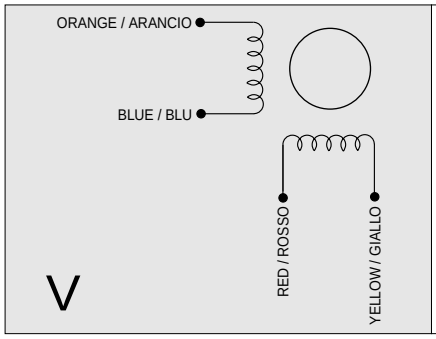

Suggested R.T.A. driver: PLUS Series, X-MIND Series.

# 103-H89222-6541

SANYO DENKI
SANMOTION

## Dimensions (Unit:mm)

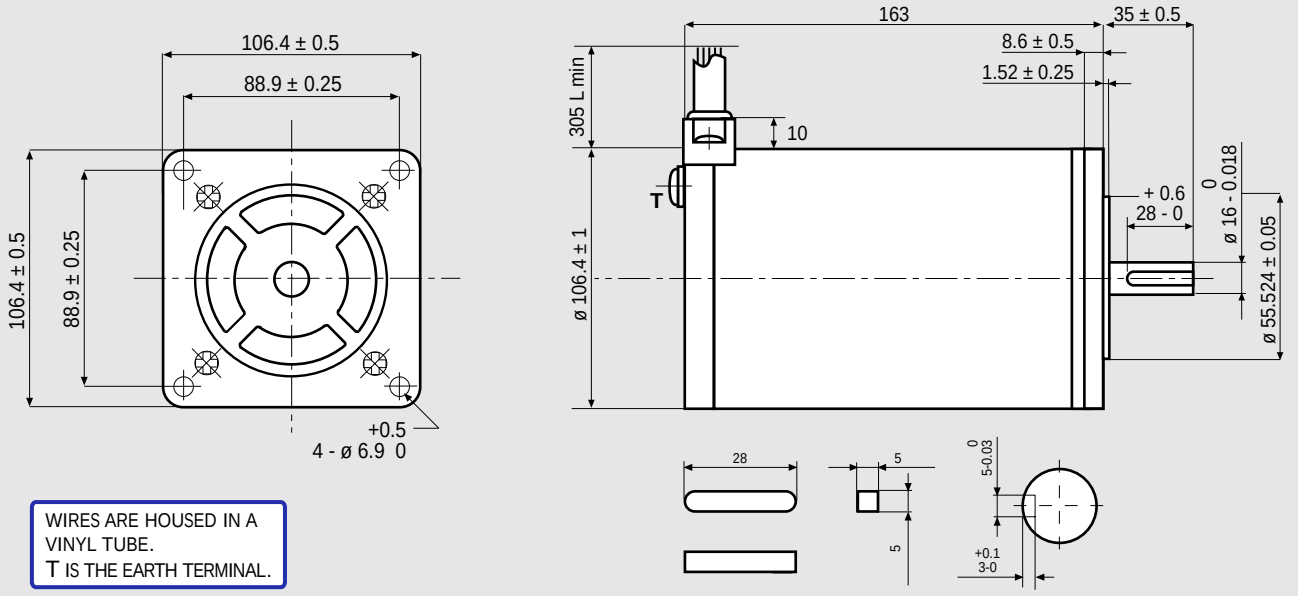


WIRES ARE HOUSED IN A VINYL TUBE.
T IS THE EARTH TERMINAL.

## FEATURES

| MODEL | | 103-H89222-6541 |
|---|---|---|
| BASIC STEP ANGLE | | 1.8° ± 0.09° |
| BIPOLAR CURRENT | (Amp) | 10 |
| UNIPOLAR CURRENT | (Amp) | |
| RESISTANCE | (Ohm) | 0.16 |
| INDUCTANCE | (mH) | 1.9 |
| BIPOLAR HOLDING TORQUE | (Ncm) | 1620 |
| UNIPOLAR HOLDING TORQUE | (Ncm) | |
| ROTOR INERTIA | (Kgm $^2$ x 10 $^{-7}$) | 14650 |
| THEORETICAL ACCELERATION | (rad x sec.$^{-2}$) | 11100 |
| BACK E.M.F. | (V/Krpm) | 162 |
| MASS | (Kg) | 7 |
| PROTECTION DEGREE | | IP43 |
| LEADS CODE | | V |

## TORQUE/SPEED CURVE

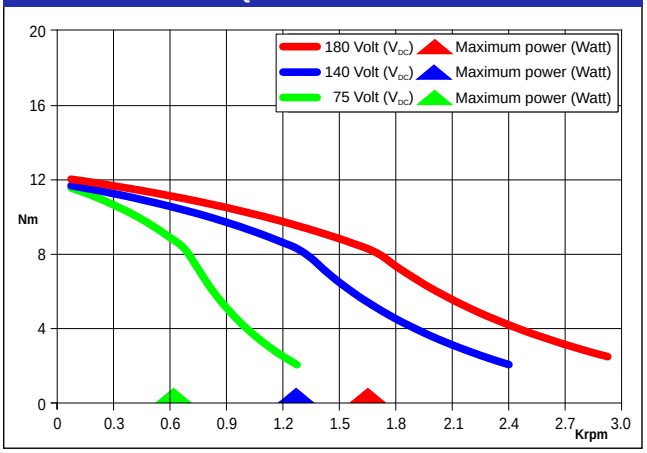


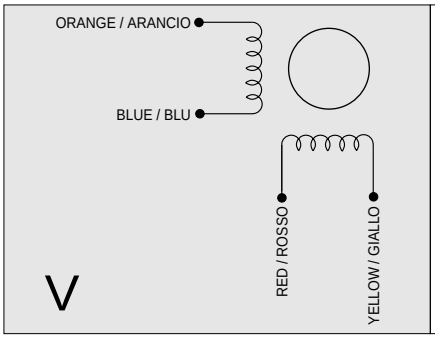

## Suggested R.T.A. driver: contact R.T.A.




R.T.A. s.r.l. PAVIA (ITALY) SANYO DENKI CO.,Ltd (JAPAN)

# 103-H89223-6341

SANYO DENKI
SANMOTION

## Dimensions (Unit:mm)

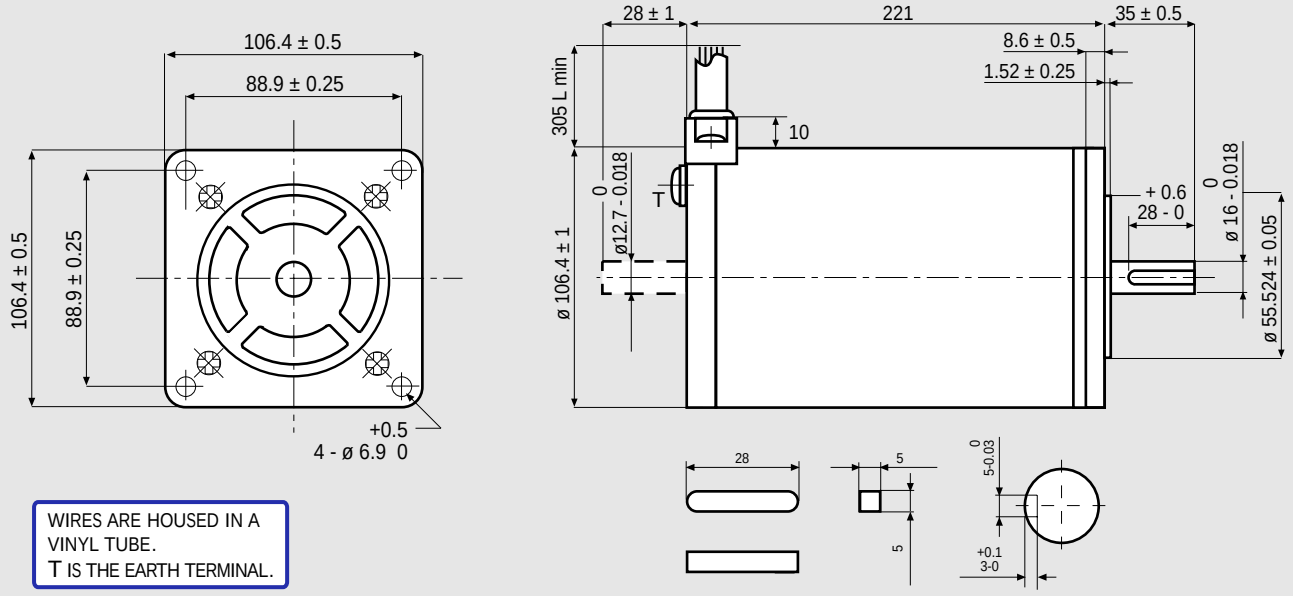


WIRES ARE HOUSED IN A VINYL TUBE.
T IS THE EARTH TERMINAL.

## FEATURES

| MODEL | | 103-H89223-6341 (103-H89223-6311) |
|---|---|---|
| BASIC STEP ANGLE | | 1.8° ± 0.09° |
| BIPOLAR CURRENT | (Amp) | 6.0 |
| UNIPOLAR CURRENT | (Amp) | |
| RESISTANCE | (Ohm) | 0.63 |
| INDUCTANCE | (mH) | 8.0 |
| BIPOLAR HOLDING TORQUE | (Ncm) | 2460 |
| UNIPOLAR HOLDING TORQUE | (Ncm) | |
| ROTOR INERTIA | (Kgm $^2$ x 10 $^{-7}$) | 22000 |
| THEORETICAL ACCELERATION | (rad x sec.$^{-2}$) | 11100 |
| BACK E.M.F. | (V/Krpm) | 410 |
| MASS | (Kg) | 10 |
| PROTECTION DEGREE | | IP43 |
| LEADS CODE | | V |

Codes between brackets refer to double shaft models.
*Le sigle fra parentesi si riferiscono ai modelli bialbero.*

## TORQUE/SPEED CURVE

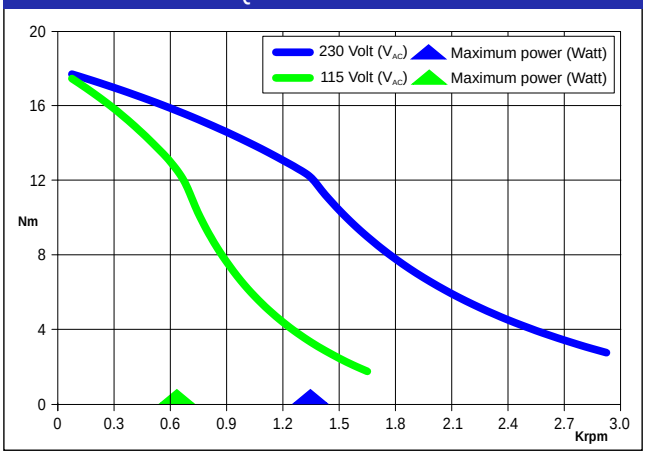


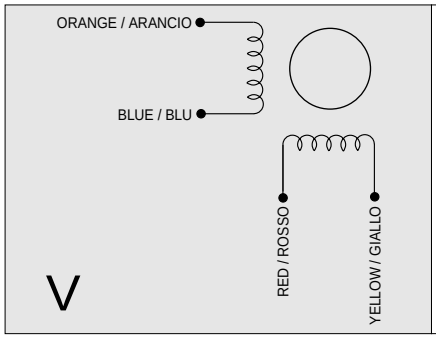

Suggested R.T.A. driver: PLUS Series, X-MIND Series.

R.T.A. s.r.l. PAVIA (ITALY) SANYO DENKI CO.,Ltd (JAPAN)

# 103-H89223-6641

SANYO DENKI
SANMOTION

## Dimensions (Unit:mm)

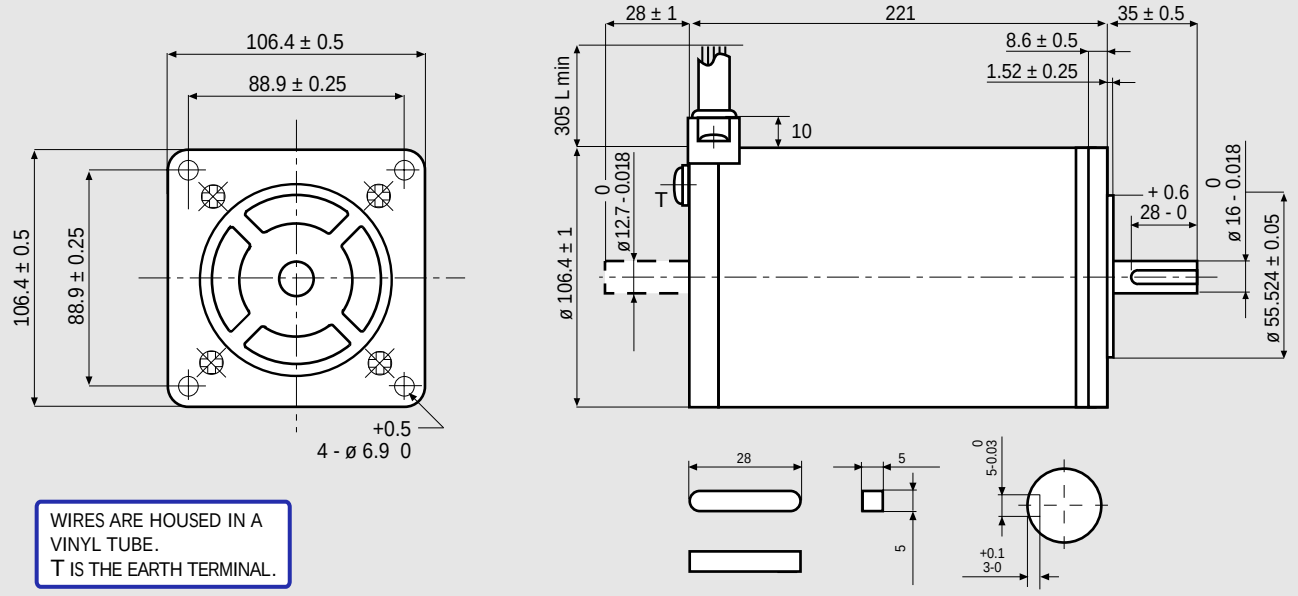


WIRES ARE HOUSED IN A VINYL TUBE.
T IS THE EARTH TERMINAL.

## FEATURES

| MODEL | | 103-H89223-6641 (103-H89223-6611) |
|---|---|---|
| BASIC STEP ANGLE | | 1.8° ± 0.09° |
| BIPOLAR CURRENT | (Amp) | 12.0 |
| UNIPOLAR CURRENT | (Amp) | |
| RESISTANCE | (Ohm) | 0.16 |
| INDUCTANCE | (mH) | 2.0 |
| BIPOLAR HOLDING TORQUE | (Ncm) | 2460 |
| UNIPOLAR HOLDING TORQUE | (Ncm) | |
| ROTOR INERTIA | (Kgm $^2$ x 10 $^{-7}$) | 22000 |
| THEORETICAL ACCELERATION | (rad x sec.$^{-2}$) | 11100 |
| BACK E.M.F. | (V/Krpm) | 205 |
| MASS | (Kg) | 10 |
| PROTECTION DEGREE | | IP43 |
| LEADS CODE | | V |

Codes between brackets refer to double shaft models.
*Le sigle fra parentesi si riferiscono ai modelli bialbero.*

## TORQUE/SPEED CURVE

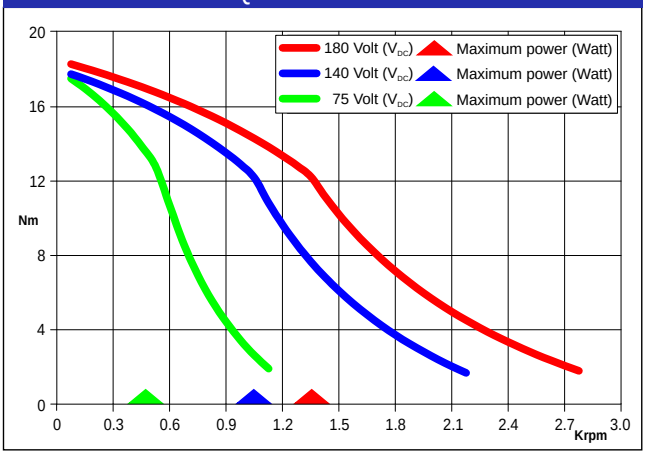


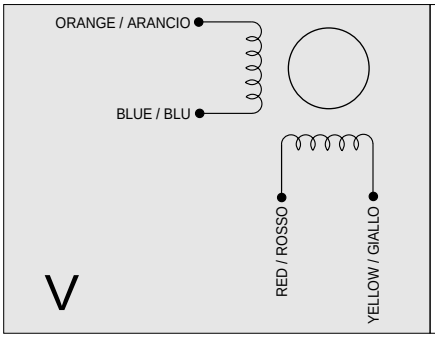

Suggested R.T.A. driver: contact R.T.A.

R.T.A. s.r.l. PAVIA (ITALY) SANYO DENKI CO.,Ltd (JAPAN)

# Connection schematics of R.T.A. drives with SANYO DENKI motors

| LEADS CODE<br>*CODICE TERMINALI* | PARALLEL BIPOLAR CONNECTION<br>*COLLEGAMENTO BIPOLARE PARALLELO* | SERIES BIPOLAR CONNECTION<br>*COLLEGAMENTO BIPOLARE SERIE* | UNIPOLAR CONNECTION<br>*COLLEGAMENTO UNIPOLARE* |
|---|---|---|---|
| **I** | 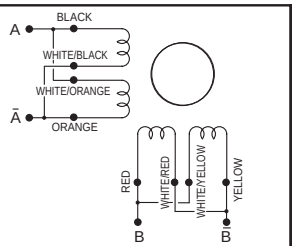 | 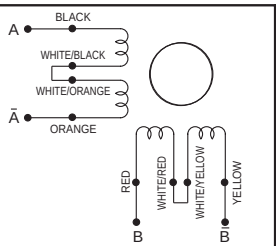 | 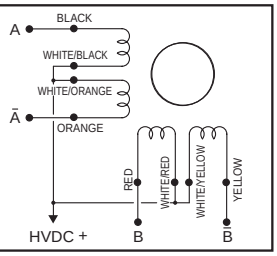 |
| **II** | 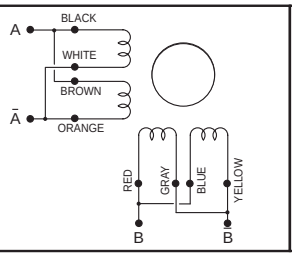 | 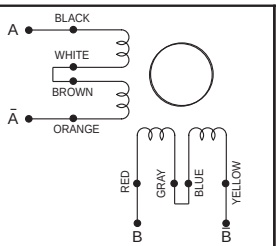 | 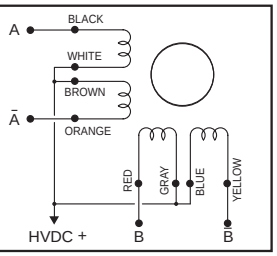 |
| **III** | 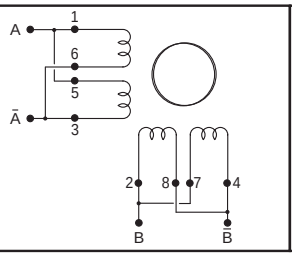 | 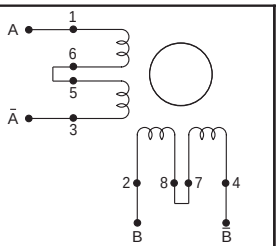 | 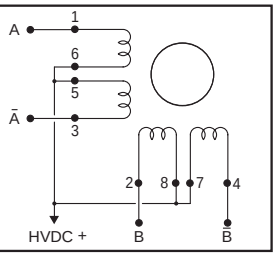 |
| **IV** | 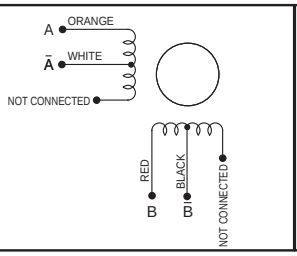 | 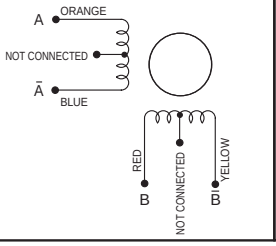 | 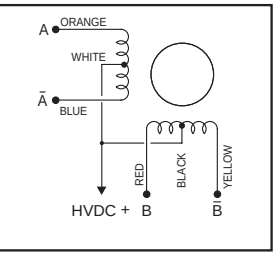 |
| **V** | 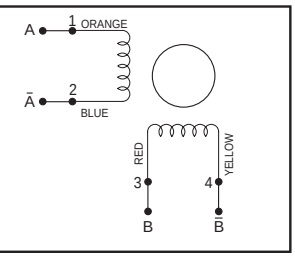 | | |
| **VI** | 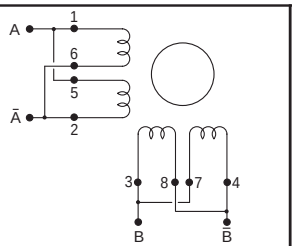 | 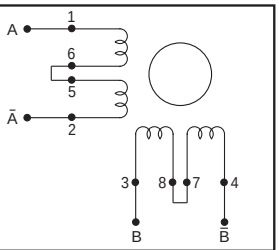 | |

## CONVERSION FACTORS

| | |
|---|---|
| LENGTH | 1 mm = 3.937 x $10^{-2}$ inch |
| MASS | 1 Kg = 2.205 x lb force |
| INERTIA | $10^7$ g $cm^2$ = 1 Kg $m^2$ = 5.467 x $10^4$ oz $in^2$ = 3.417 x $10^3$ lb $in^2$ |
| TORQUE | 1 Nm = 1.416 x $10^2$ oz in = 0.738 ft lb = 8.85 in lb<br>1 Ncm = 1.416 oz in = 7.38 x $10^{-3}$ ft lb = 8.85 x $10^{-2}$ in lb |
| POWER | 1 KW = 1.34 hp<br>1 W = 1.34 x $10^{-3}$ hp |

# Stepping motors with Encoder

# STEPPING MOTORS WITH ENCODER
# TABLE OF CONTENTS

| STEPPING MOTORS WITH ENCODER (EM series motors) | SANYO DENKI MOTOR CODE *CODICE MOTORE SANYO DENKI* | HOLDING TORQUE *COPPIA DI TENUTA* (Ncm.) | FLANGE SIZE *DIMENSIONI FLANGIA* (mm.) | LENGTH *LUNGHEZZA* (mm.) | CURRENT *CORRENTE* (Amp) | TECHNICAL DATA *DATI TECNICI* (page/pagina) |
|---|---|---|---|---|---|---|
| SIZE 1.7" - ☐ 42 mm. | | | | | | |
| EM 1H2H-04D0 | 103-H5210-4512 | 51 | ☐ 42 | 48.0 | 2.0 | 60 |
| SIZE 2.2" - ☐ 56 mm. | | | | | | |
| EM 2H1M-04D0 | 103-H7123-1711 | 110 | ☐ 56 | 53.8 | 4.0 | 61 |
| EM 2H2M-04D0 | 103-H7126-1710 | 165 | ☐ 56 | 75.8 | 4.0 | 62 |
| SIZE 60 mm. - ☐ 60 mm. | | | | | | |
| EM 6H2M-04D0 | 103-H7823-1714 | 300 | ☐ 60 | 85.8 | 4.0 | 63 |
| SIZE 3.4" - ☐ 85,5 mm. | | | | | | |
| EM 3F1H-04D0 | SM 2861-5225 | 360 | ☐ 85.5 | 66.0 | 6.0 | 64 |
| EM 3F2H-04D0 | SM 2862-5225 | 700 | ☐ 85.5 | 96.5 | 6.0 | 65 |
| EM 3F3H-04D0 | SM 2863-5225 | 920 | ☐ 85.5 | 127.0 | 6.0 | 66 |
| EM 3F1L-04D0 | SM 2861-5025 | 360 | ☐ 85.5 | 66.0 | 2.0 | 67 |
| EM 3F2M-04D0 | SM 2862-5125 | 700 | ☐ 85.5 | 96.5 | 4.0 | 68 |
| EM 3F3M-14D0 | SM 2863-5126 | 920 | ☐ 85.5 | 127.0 | 4.0 | 69 |

## SUGGESTED MOTOR WITH ENCODER/DRIVE COUPLING

- The following tables show suggested motor with encoder/drive coupling between SANYO DENKI stepping motors with encoder and R.T.A. Drives.
- R.T.A. suggests contacting its commercial personnel to verify and validate the optimal motor / drive coupling.

- *Nelle tabelle seguenti sono indicati gli accoppiamenti motore con encoder/serie di azionamenti consigliati da R.T.A.*
- *R.T.A. consiglia di contattare il proprio personale commerciale per verificare e validare l'ottimale accoppiamento fra motore e azionamento.*

## STEPPING MOTORS WITH ENCODER / DRIVE COUPLING - ENCODER MANAGED BY CONTROL SYSTEM

| STEPPING MOTORS WITH ENCODER (EM series motors) | R.T.A. Drives / *Azionamenti R.T.A.** | | | | | | | | | | | | | |
|---|---|---|---|---|---|---|---|---|---|---|---|---|---|---|
| | BSD | CSD | CSD J | A-CSD | NDC | A-NDC | ADW | HGD | PLUS A/B | PLUS K | PLUS J | X-PLUS B | X-MIND B | X-MIND K |
| SIZE 1.7" - □ 42 mm. | | | | | | | | | | | | | | |
| EM 1H2H-04D0 | ■ | ■ | | ■ | ■ | ■ | ■ | ■ | | | | | | |
| SIZE 2.2" - □ 56 mm. | | | | | | | | | | | | | | |
| EM 2H1M-04D0 | | ■ | ■ | ■ | ■ | ■ | ■ | ■ | ■ | ■ | ■ | | | |
| EM 2H2M-04D0 | | ■ | ■ | ■ | ■ | ■ | ■ | ■ | ■ | ■ | ■ | | | |
| SIZE 60 mm. - □ 60 mm. | | | | | | | | | | | | | | |
| EM 6H2M-04D0 | | ■ | ■ | ■ | ■ | ■ | ■ | ■ | ■ | ■ | ■ | | | |
| SIZE 3.4" - □ 85,5 mm. | | | | | | | | | | | | | | |
| EM 3F1H-04D0 | | | | | ■ | ■ | ■ | ■ | ■ | ■ | ■ | | | |
| EM 3F2H-04D0 | | | | | ■ | ■ | ■ | ■ | ■ | ■ | ■ | | | |
| EM 3F3H-04D0 | | | | | ■ | ■ | ■ | ■ | ■ | ■ | ■ | | | |
| EM 3F1L-04D0 | | | | | | | | | | | | ■ | ■ | ■ |
| EM 3F2M-04D0 | | | | | | | | | | | | ■ | ■ | ■ |
| EM 3F3M-14D0 | | | | | | | | | | | | ■ | ■ | ■ |

## STEPPING MOTORS WITH ENCODER / DRIVE COUPLING - ENCODER MANAGED BY R.T.A. DRIVE

| STEPPING MOTORS WITH ENCODER (EM series motors) | R.T.A. Drives / *Azionamenti R.T.A.** | | | |
|---|---|---|---|---|
| | Standard signal : DIFFERENTIAL | | Standard signal : SINGLE ENDED | |
| | PLUS ET series | X-PLUS ET series | PLUS E series | PLUS L series |
| SIZE 2.2" - □ 56 mm. | | | | |
| EM 2H1M-04D0 ( 04S0 ) | ▬ | | ▬ | ▬ |
| EM 2H2M-04D0 ( 04S0 ) | ▬ | | ▬ | ▬ |
| SIZE 60 mm. - □ 60 mm. | | | | |
| EM 6H2M-04D0 ( 04S0 ) | ▬ | | ▬ | ▬ |
| SIZE 3.4" - □ 85,5 mm. | | | | |
| EM 3F1H-04D0 ( 04S0 ) | ▬ | | ▬ | ▬ |
| EM 3F2H-04D0 ( 04S0 ) | ▬ | | ▬ | ▬ |
| EM 3F3H-04D0 ( 04S0 ) | ▬ | | ▬ | ▬ |
| EM 3F1L-04D0 | | ▬ | | |
| EM 3F2M-04D0 | | ▬ | | |
| EM 3F3M-14D0 | | ▬ | | |

NOTE: Codes between brackets refer to models with SINGLE ENDED standard signal.
*NOTA: Le sigle fra parentesi si riferiscono ai modelli con segnale di uscita SINGLE ENDED.*

*For more info, please refer to www.rta.it
**Per ulteriori informazioni, si veda www.rta.it*

# EM 1H2H-04D0

## Dimensions (Unit:mm)

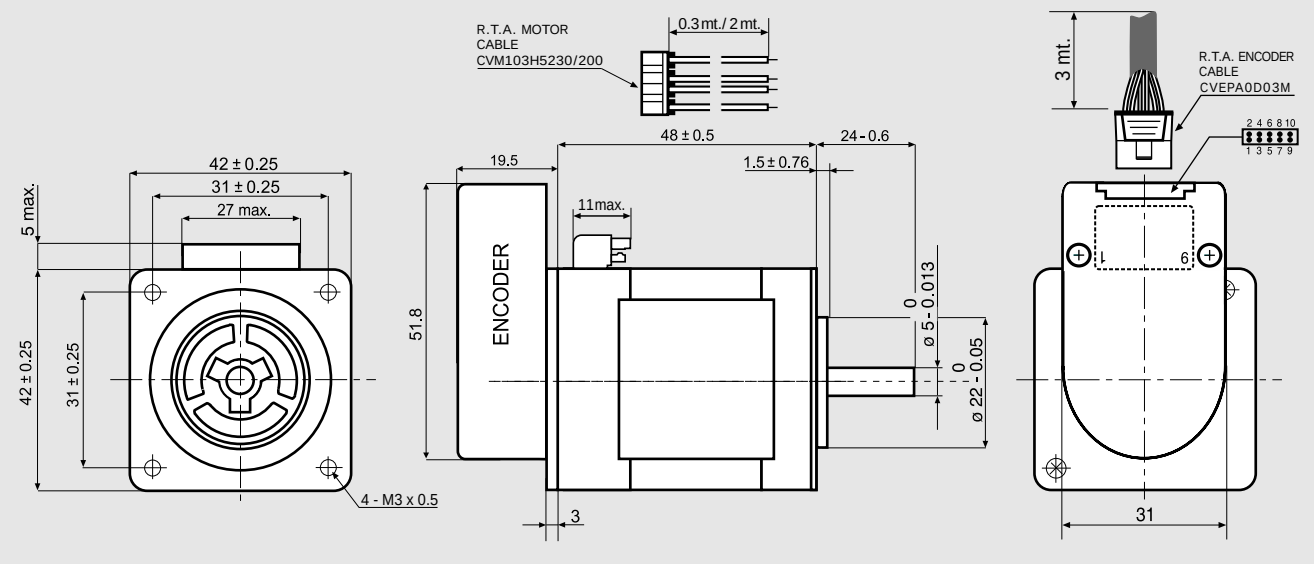


| SANYO DENKI MOTOR FEATURES | | |
|---|---|---|
| **MODEL** | | EM 1H2H-04D0 |
| SANYO DENKI MOTOR CODE | | 103-H5210-4512 |
| BASIC STEP ANGLE | | 1.8° ± 0.09° |
| BIPOLAR PARALLEL CURRENT | (Amp) | 2.0 |
| RESISTANCE | (Ohm) | 1.25 |
| INDUCTANCE | (mH) | 2.4 |
| BIPOLAR HOLDING TORQUE | (Ncm) | 51 |
| ROTOR INERTIA | ($Kgm^2 \times 10^{-7}$) | 74 |
| THEORETICAL ACCELERATION | (rad × $sec.^{-2}$) | 69000 |
| BACK E.M.F. | (V/Krpm) | 14 |
| MASS | (Kg) | 0.35 |
| LEADS CODE | | V |
| 103-H5210-4512 MOTOR NEEDS CVM103H5230 OR CVM103H52200 R.T.A. CABLES. CONTACT R.T.A. FOR FURTHER DETAILS. | | |

SANYO DENKI CO.,Ltd (JAPAN)
R.T.A. s.r.l. PAVIA (ITALY)

| ENCODER FEATURES | | |
|---|---|---|
| POWER SUPPLY VOLTAGE | (Volt) | 5 $V_{DC}$ ± 5% |
| CURRENT CONSUMPTION | (mAmp) | 50 |
| HIGH LEVEL OUTPUT | (Volt) | 3.5 (TIP) - 2.4 (MIN) ($I_{MAX}$=10 mA) |
| LOW LEVEL OUTPUT | (Volt) | 0.2 (TIP) - 0.4 (MAX) ($I_{MAX}$=10 mA) |
| OUTPUT SIGNAL | | Differential (SINGLE ENDED version available) |
| RESOLUTION | | 400 cycles per revolution (500 & 1000 CPR version available) |
| MAXIMUM FREQUENCY | (KHz) | 100 |
| INDEX VERSION | | Available upon request |
| ENCODER NEEDS CVEPA0D03M R.T.A. CABLE. CONTACT R.T.A. FOR FURTHER DETAILS. | | |

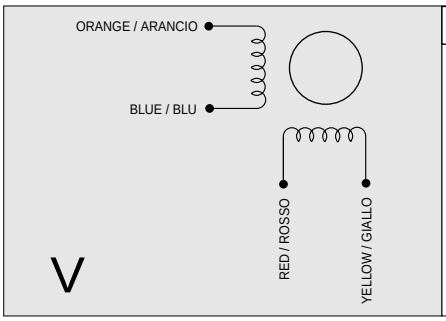


**ENCODER PIN-OUTS**

| PIN | DESCRIPTION |
|---|---|
| 1 | NO CONNECTION |
| 2 | + DC (5 V) |
| 3 | GROUND |
| 4 | NO CONNECTION |
| 5 | CHANNEL A- |

| PIN | DESCRIPTION |
|---|---|
| 6 | CHANNEL A+ |
| 7 | CHANNEL B- |
| 8 | CHANNEL B+ |
| 9 | NO CONNECTION |
| 10 | NO CONNECTION |

# EM 2H1M-04D0

## Dimensions (Unit:mm)

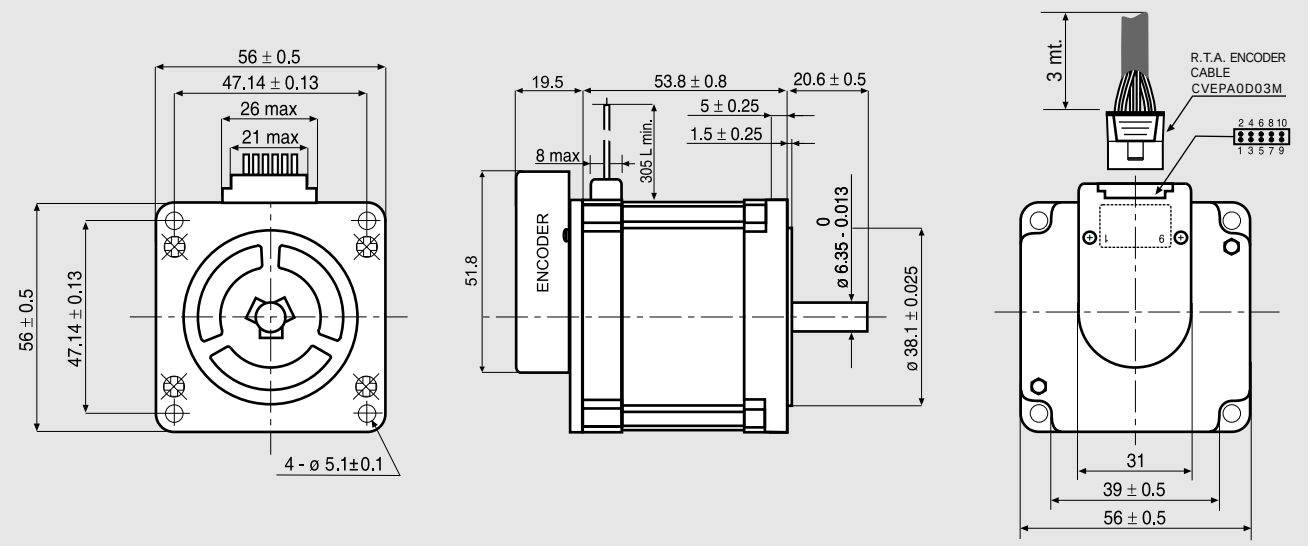


| SANYO DENKI MOTOR FEATURES | | |
|---|---|---|
| **MODEL** | | EM 2H1M-04D0 |
| SANYO DENKI MOTOR CODE | | 103-H7123-1711 |
| BASIC STEP ANGLE | | 1.8° ± 0.09° |
| BIPOLAR PARALLEL CURRENT | (Amp) | 4.0 |
| RESISTANCE | (Ohm) | 0.41 |
| INDUCTANCE | (mH) | 1.6 |
| BIPOLAR HOLDING TORQUE | (Ncm) | 110 |
| ROTOR INERTIA | ($Kgm^2 \times 10^{-7}$) | 210 |
| THEORETICAL ACCELERATION | (rad × $sec.^{-2}$) | 50000 |
| BACK E.M.F. | (V/Krpm) | 20 |
| MASS | (Kg) | 0.65 |
| LEADS CODE | | V |

| ENCODER FEATURES | | |
|---|---|---|
| POWER SUPPLY VOLTAGE | (Volt) | 5 $V_{DC}$ ± 5% |
| CURRENT CONSUMPTION | (mAmp) | 50 |
| HIGH LEVEL OUTPUT | (Volt) | 3.5 (TIP) - 2.4 (MIN) ($I_{MAX}$=10 mA) |
| LOW LEVEL OUTPUT | (Volt) | 0.2 (TIP) - 0.4 (MAX) ($I_{MAX}$=10 mA) |
| OUTPUT SIGNAL | | Differential (SINGLE ENDED version available) |
| RESOLUTION | | 400 cycles per revolution (500 & 1000 CPR version available) |
| MAXIMUM FREQUENCY | (KHz) | 100 |
| INDEX VERSION | | Available upon request |
| ENCODER NEEDS CVEPA0D03M R.T.A. CABLE. CONTACT R.T.A. FOR FURTHER DETAILS. | | |

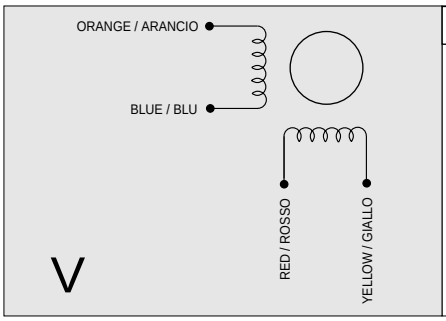


**ENCODER PIN-OUTS**

| PIN | DESCRIPTION |
|---|---|
| 1 | NO CONNECTION |
| 2 | + DC (5 V) |
| 3 | GROUND |
| 4 | NO CONNECTION |
| 5 | CHANNEL A- |

| PIN | DESCRIPTION |
|---|---|
| 6 | CHANNEL A+ |
| 7 | CHANNEL B- |
| 8 | CHANNEL B+ |
| 9 | NO CONNECTION |
| 10 | NO CONNECTION |

R.T.A. s.r.l. PAVIA (ITALY) SANYO DENKI CO.,Ltd (JAPAN)

# EM 2H2M-04D0

## Dimensions (Unit:mm)

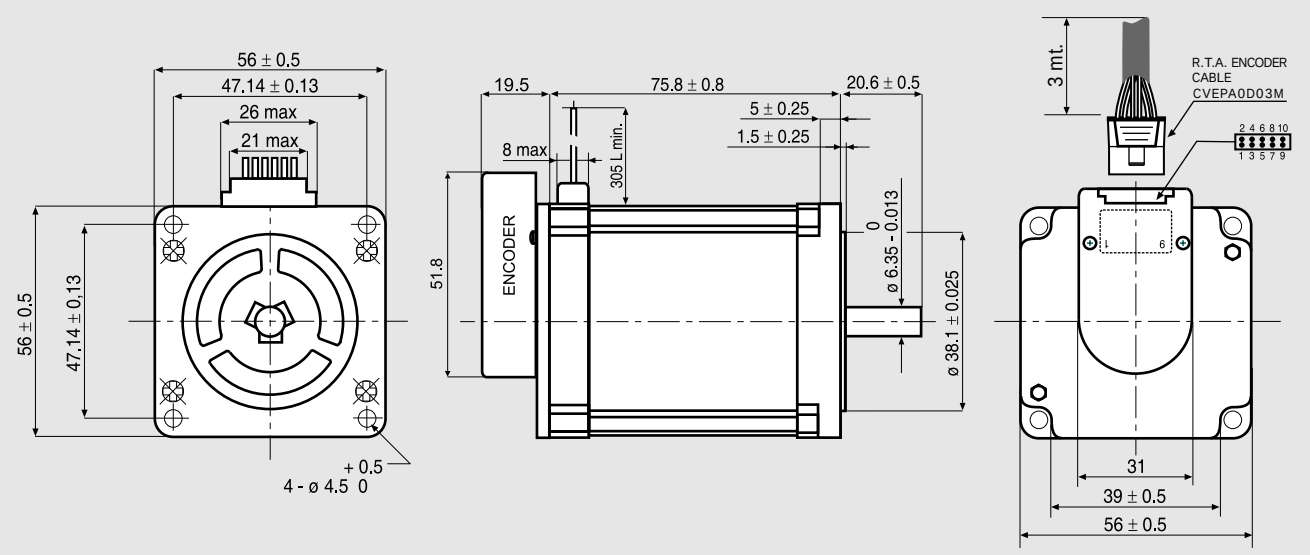


## SANYO DENKI MOTOR FEATURES

| MODEL | | EM 2H2M-04D0 |
|---|---|---|
| SANYO DENKI MOTOR CODE | | 103-H7126-1710 |
| BASIC STEP ANGLE | | 1.8° ± 0.09° |
| BIPOLAR PARALLEL CURRENT | (Amp) | 4.0 |
| RESISTANCE | (Ohm) | 0.48 |
| INDUCTANCE | (mH) | 2.2 |
| BIPOLAR HOLDING TORQUE | (Ncm) | 165 |
| ROTOR INERTIA | ($Kgm^2 \times 10^{-7}$) | 360 |
| THEORETICAL ACCELERATION | (rad × $sec.^{-2}$) | 45800 |
| BACK E.M.F. | (V/Krpm) | 31 |
| MASS | (Kg) | 1.0 |
| LEADS CODE | | V |

## ENCODER FEATURES

| | | |
|---|---|---|
| POWER SUPPLY VOLTAGE | (Volt) | 5 $V_{DC}$ ± 5% |
| CURRENT CONSUMPTION | (mAmp) | 50 |
| HIGH LEVEL OUTPUT | (Volt) | 3.5 (TIP) - 2.4 (MIN) ($I_{MAX}$=10 mA) |
| LOW LEVEL OUTPUT | (Volt) | 0.2 (TIP) - 0.4 (MAX) ($I_{MAX}$=10 mA) |
| OUTPUT SIGNAL | | Differential (SINGLE ENDED version available) |
| RESOLUTION | | 400 cycles per revolution (500 & 1000 CPR version available) |
| MAXIMUM FREQUENCY | (KHz) | 100 |
| INDEX VERSION | | Available upon request |
| ENCODER NEEDS CVEPA0D03M R.T.A. CABLE. CONTACT R.T.A. FOR FURTHER DETAILS. | | |

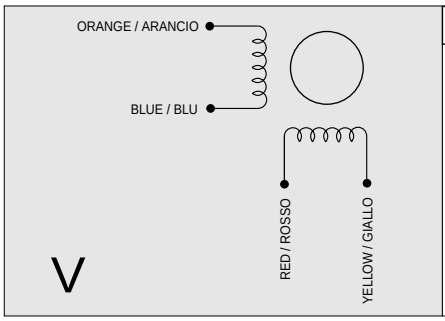


### ENCODER PIN-OUTS

| PIN | DESCRIPTION |
|---|---|
| 1 | NO CONNECTION |
| 2 | + DC (5 V) |
| 3 | GROUND |
| 4 | NO CONNECTION |
| 5 | CHANNEL A- |

| PIN | DESCRIPTION |
|---|---|
| 6 | CHANNEL A+ |
| 7 | CHANNEL B- |
| 8 | CHANNEL B+ |
| 9 | NO CONNECTION |
| 10 | NO CONNECTION |

R.T.A. s.r.l. PAVIA (ITALY) SANYO DENKI CO.,Ltd (JAPAN)

# EM 6H2M-04D0

## Dimensions (Unit:mm)

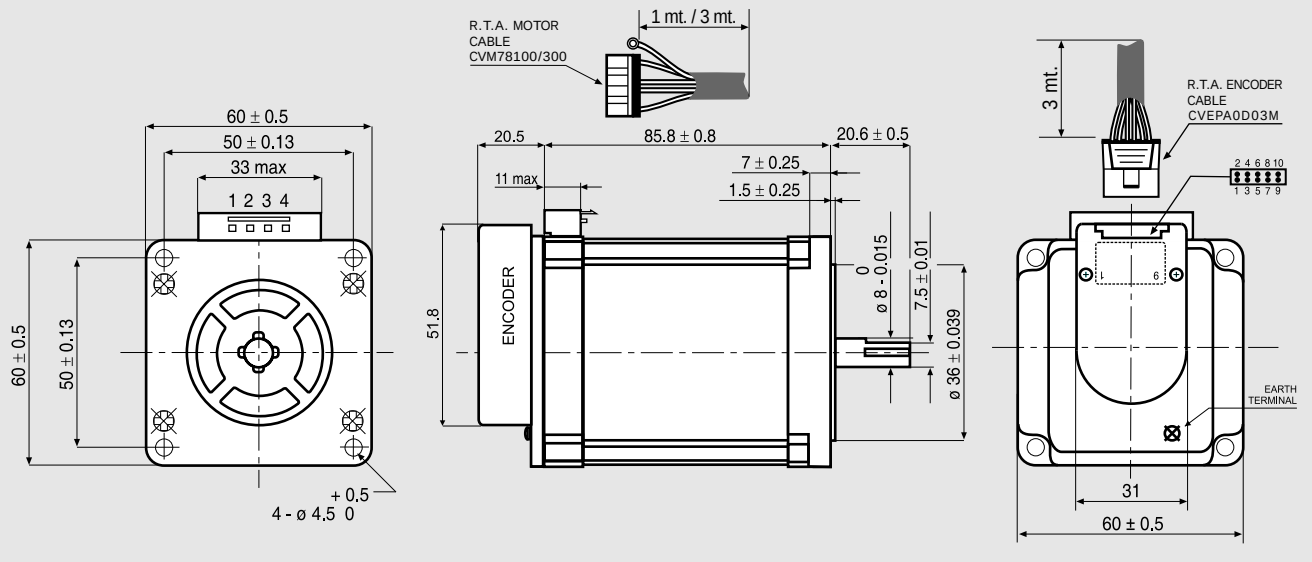


| SANYO DENKI MOTOR FEATURES | | |
|---|---|---|
| **MODEL** | | EM 6H2M-04D0 |
| SANYO DENKI MOTOR CODE | | 103-H7823-1714 |
| BASIC STEP ANGLE | | 1.8° ± 0.09° |
| BIPOLAR PARALLEL CURRENT | (Amp) | 4.0 |
| RESISTANCE | (Ohm) | 0.65 |
| INDUCTANCE | (mH) | 2.4 |
| BIPOLAR HOLDING TORQUE | (Ncm) | 300 |
| ROTOR INERTIA | ($Kgm^2 \times 10^{-7}$) | 840 |
| THEORETICAL ACCELERATION | ($rad \times sec.^{-2}$) | 35700 |
| BACK E.M.F. | (V/Krpm) | 75 |
| MASS | (Kg) | 1.4 |
| LEADS CODE | | V |
| 103-H7823-1714 MOTOR NEEDS CVM78/100 OR CVM78/300 R.T.A. CABLES. CONTACT R.T.A. FOR FURTHER DETAILS. | | |

| ENCODER FEATURES | | |
|---|---|---|
| POWER SUPPLY VOLTAGE | (Volt) | 5 $V_{DC}$ ± 5% |
| CURRENT CONSUMPTION | (mAmp) | 50 |
| HIGH LEVEL OUTPUT | (Volt) | 3.5 (TIP) - 2.4 (MIN) ($I_{MAX}$=10 mA) |
| LOW LEVEL OUTPUT | (Volt) | 0.2 (TIP) - 0.4 (MAX) ($I_{MAX}$=10 mA) |
| OUTPUT SIGNAL | | Differential (SINGLE ENDED version available) |
| RESOLUTION | | 400 cycles per revolution (500 & 1000 CPR version available) |
| MAXIMUM FREQUENCY | (KHz) | 100 |
| INDEX VERSION | | Available upon request |
| ENCODER NEEDS CVEPA0D03M R.T.A. CABLE. CONTACT R.T.A. FOR FURTHER DETAILS. | | |

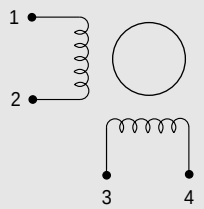


V

**ENCODER PIN-OUTS**

| PIN | DESCRIPTION |
|---|---|
| 1 | NO CONNECTION |
| 2 | + DC (5 V) |
| 3 | GROUND |
| 4 | NO CONNECTION |
| 5 | CHANNEL A- |

| PIN | DESCRIPTION |
|---|---|
| 6 | CHANNEL A+ |
| 7 | CHANNEL B- |
| 8 | CHANNEL B+ |
| 9 | NO CONNECTION |
| 10 | NO CONNECTION |



R.T.A. s.r.l. PAVIA (ITALY) SANYO DENKI CO.,Ltd (JAPAN)

# EM 3F1H-04D0

## Dimensions (Unit:mm)

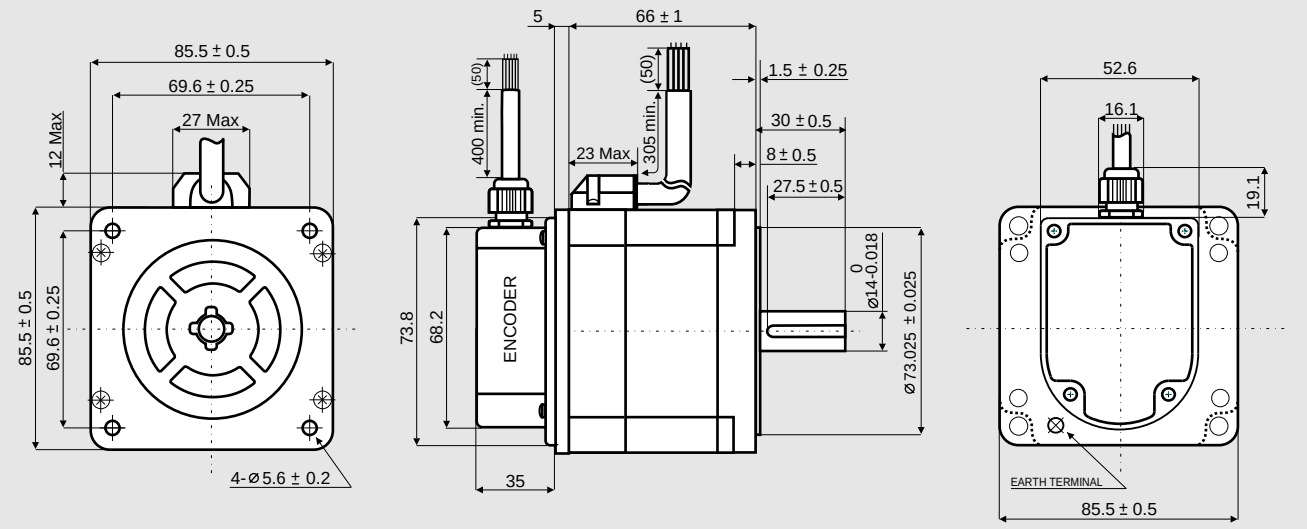


## SANYO DENKI MOTOR FEATURES

| MODEL | | EM 3F1H-04D0 |
|---|---|---|
| SANYO DENKI MOTOR CODE | | SM 2861-5225 |
| BASIC STEP ANGLE | | 1.8° ± 0.09° |
| BIPOLAR PARALLEL CURRENT | (Amp) | 6.0 |
| RESISTANCE | (Ohm) | 0.29 |
| INDUCTANCE | (mH) | 1.7 |
| BIPOLAR HOLDING TORQUE | (Ncm) | 360 |
| ROTOR INERTIA | ($Kgm^2 \times 10^{-7}$) | 1480 |
| THEORETICAL ACCELERATION | ($rad \times sec.^{-2}$) | 24300 |
| BACK E.M.F. | (V/Krpm) | 60 |
| MASS | (Kg) | 1.7 |
| INTERNATIONAL STANDARDS | | UL, CSA |
| INSULATION VOLTAGE | (V) | 250 VAC (350 VDC) |
| PROTECTION DEGREE - INSULATION CLASS | | IP43 - F |
| LEADS CODE | | V |

R.T.A. s.r.l. PAVIA (ITALY) SANYO DENKI CO.,Ltd (JAPAN)

## ENCODER FEATURES

| | | |
|---|---|---|
| POWER SUPPLY VOLTAGE | (Volt) | 5 $V_{DC}$ ± 5% |
| CURRENT CONSUMPTION | (mAmp) | 40 |
| HIGH LEVEL OUTPUT | (Volt) | 3.4 (TIP) - 2.4 (MIN) ($I_{MAX}$=20 mA) |
| LOW LEVEL OUTPUT | (Volt) | 0.2 (TIP) - 0.4 (MAX) ($I_{MAX}$=20 mA) |
| OUTPUT SIGNAL | | Differential (SINGLE ENDED version available) |
| RESOLUTION | | 400 cycles per revolution (500 & 1000 CPR version available) |
| MAXIMUM FREQUENCY | (KHz) | 60 |
| INDEX VERSION | | Available upon request |

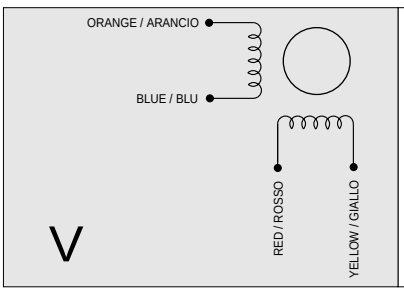


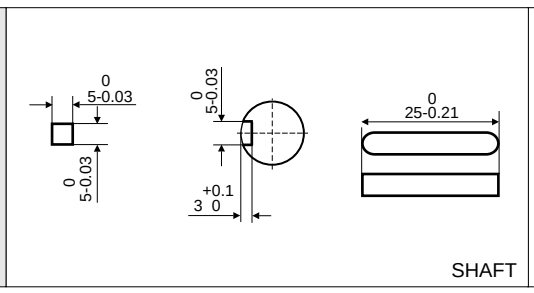


| LEADS COLOR | ENCODER |
|---|---|
| BROWN | CHANNEL A- |
| BLUE | CHANNEL A+ |
| PURPLE | CHANNEL B- |
| GREEN | CHANNEL B+ |
| BLACK | GND (0 V) |
| RED | + DC (5 V) |
| SHIELD | |

# EM 3F2H-04D0

## Dimensions (Unit:mm)

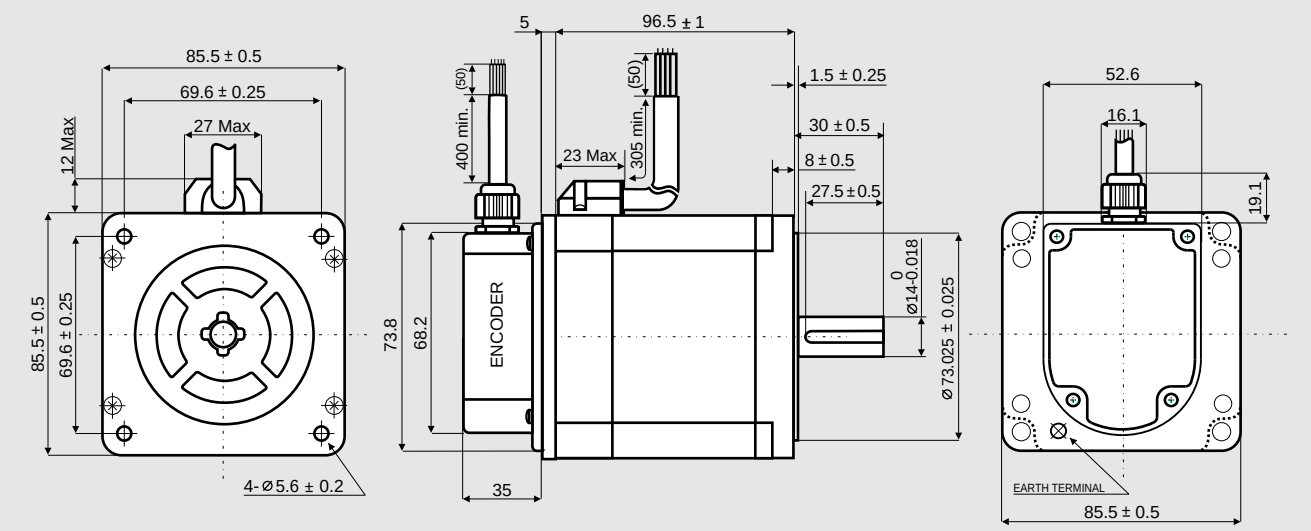


## SANYO DENKI MOTOR FEATURES

| MODEL | | EM 3F2H-04D0 |
|---|---|---|
| SANYO DENKI MOTOR CODE | | SM 2862-5225 |
| BASIC STEP ANGLE | | 1.8° ± 0.09° |
| BIPOLAR PARALLEL CURRENT | (Amp) | 6.0 |
| RESISTANCE | (Ohm) | 0.36 |
| INDUCTANCE | (mH) | 2.8 |
| BIPOLAR HOLDING TORQUE | (Ncm) | 700 |
| ROTOR INERTIA | ($Kgm^2 \times 10^{-7}$) | 3000 |
| THEORETICAL ACCELERATION | (rad × $sec.^{-2}$) | 23300 |
| BACK E.M.F. | (V/Krpm) | 120 |
| MASS | (Kg) | 2.9 |
| INTERNATIONAL STANDARDS | | UL, CSA |
| INSULATION VOLTAGE | (V) | 250 VAC (350 VDC) |
| PROTECTION DEGREE - INSULATION CLASS | | IP43 - F |
| LEADS CODE | | V |

## ENCODER FEATURES

| | | |
|---|---|---|
| POWER SUPPLY VOLTAGE | (Volt) | 5 $V_{DC}$ ± 5% |
| CURRENT CONSUMPTION | (mAmp) | 40 |
| HIGH LEVEL OUTPUT | (Volt) | 3.4 (TIP) - 2.4 (MIN) ($I_{MAX}$=20 mA) |
| LOW LEVEL OUTPUT | (Volt) | 0.2 (TIP) - 0.4 (MAX) ($I_{MAX}$=20 mA) |
| OUTPUT SIGNAL | | Differential (SINGLE ENDED version available) |
| RESOLUTION | | 400 cycles per revolution (500 & 1000 CPR version available) |
| MAXIMUM FREQUENCY | (KHz) | 60 |
| INDEX VERSION | | Available upon request |

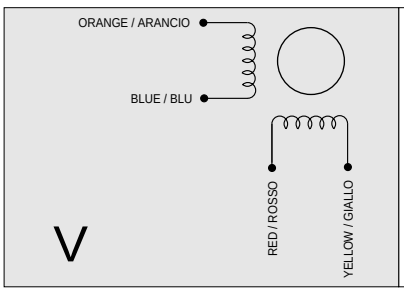


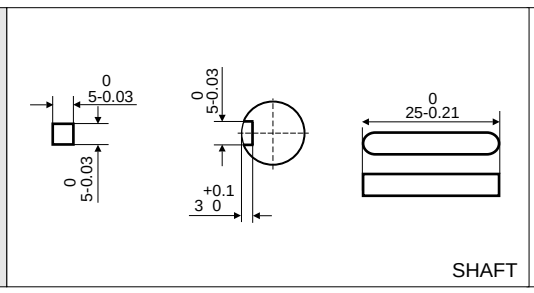


| LEADS COLOR | ENCODER |
|---|---|
| BROWN | CHANNEL A- |
| BLUE | CHANNEL A+ |
| PURPLE | CHANNEL B- |
| GREEN | CHANNEL B+ |
| BLACK | GND (0 V) |
| RED | + DC (5 V) |
| SHIELD | |

R.T.A. s.r.l. PAVIA (ITALY) SANYO DENKI CO.,Ltd (JAPAN)

# EM 3F3H-04D0

## Dimensions (Unit:mm)

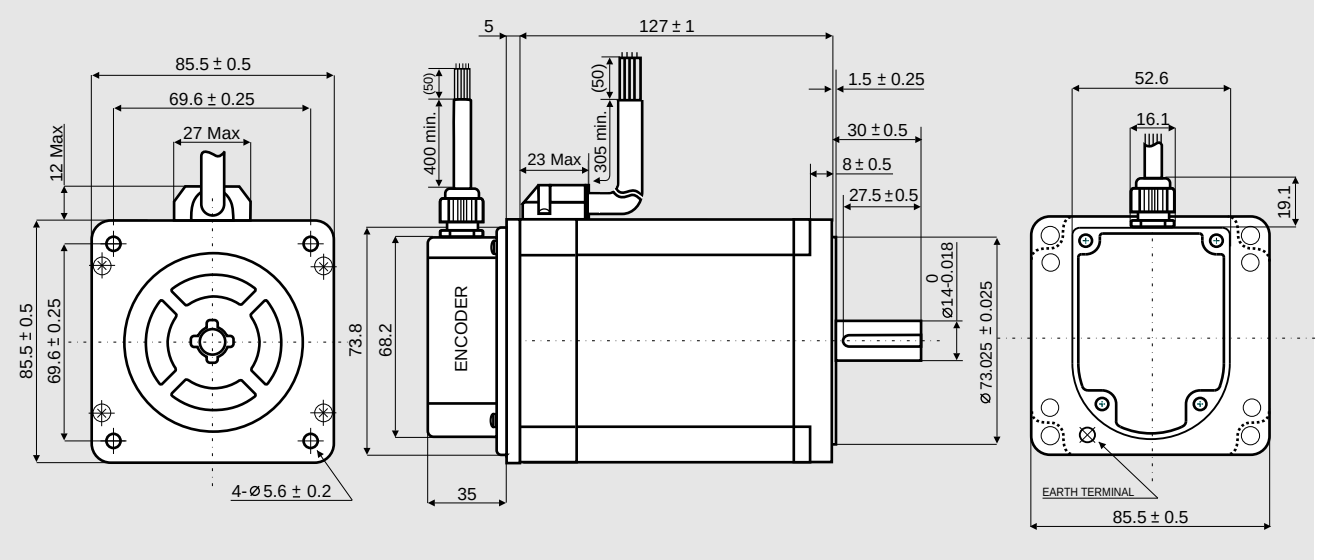


## SANYO DENKI MOTOR FEATURES

| MODEL | | EM 3F3H-04D0 |
|---|---|---|
| SANYO DENKI MOTOR CODE | | SM 2863-5225 |
| BASIC STEP ANGLE | | 1.8° ± 0.09° |
| BIPOLAR PARALLEL CURRENT | (Amp) | 6.0 |
| RESISTANCE | (Ohm) | 0.46 |
| INDUCTANCE | (mH) | 3.8 |
| BIPOLAR HOLDING TORQUE | (Ncm) | 920 |
| ROTOR INERTIA | ($Kgm^2 \times 10^{-7}$) | 4500 |
| THEORETICAL ACCELERATION | ($rad \times sec.^{-2}$) | 20500 |
| BACK E.M.F. | (V/Krpm) | 161 |
| MASS | (Kg) | 4.0 |
| INTERNATIONAL STANDARDS | | UL, CSA |
| INSULATION VOLTAGE | (V) | 250 VAC (350 VDC) |
| PROTECTION DEGREE - INSULATION CLASS | | IP43 - F |
| LEADS CODE | | V |

R.T.A. s.r.l. PAVIA (ITALY) SANYO DENKI CO.,Ltd (JAPAN)

## ENCODER FEATURES

| | | |
|---|---|---|
| POWER SUPPLY VOLTAGE | (Volt) | 5 $V_{DC}$ ± 5% |
| CURRENT CONSUMPTION | (mAmp) | 40 |
| HIGH LEVEL OUTPUT | (Volt) | 3.4 (TIP) - 2.4 (MIN) ($I_{MAX}$=20 mA) |
| LOW LEVEL OUTPUT | (Volt) | 0.2 (TIP) - 0.4 (MAX) ($I_{MAX}$=20 mA) |
| OUTPUT SIGNAL | | Differential (SINGLE ENDED version available) |
| RESOLUTION | | 400 cycles per revolution (500 & 1000 CPR version available) |
| MAXIMUM FREQUENCY | (KHz) | 60 |
| INDEX VERSION | | Available upon request |

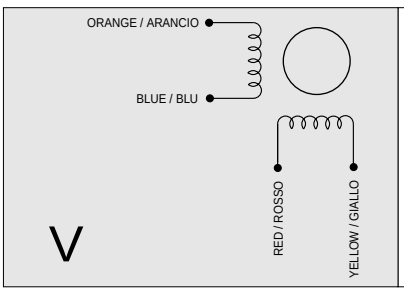


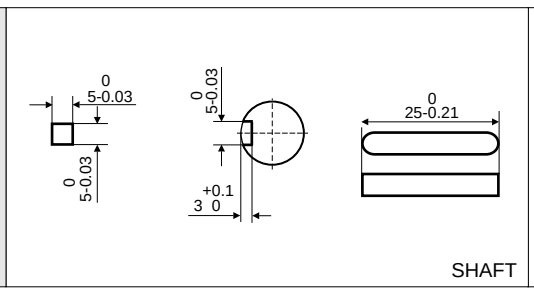


| LEADS COLOR | ENCODER |
|---|---|
| BROWN | CHANNEL A- |
| BLUE | CHANNEL A+ |
| PURPLE | CHANNEL B- |
| GREEN | CHANNEL B+ |
| BLACK | GND (0 V) |
| RED | + DC (5 V) |
| SHIELD | |

# EM 3F1L-04D0

## Dimensions (Unit:mm)

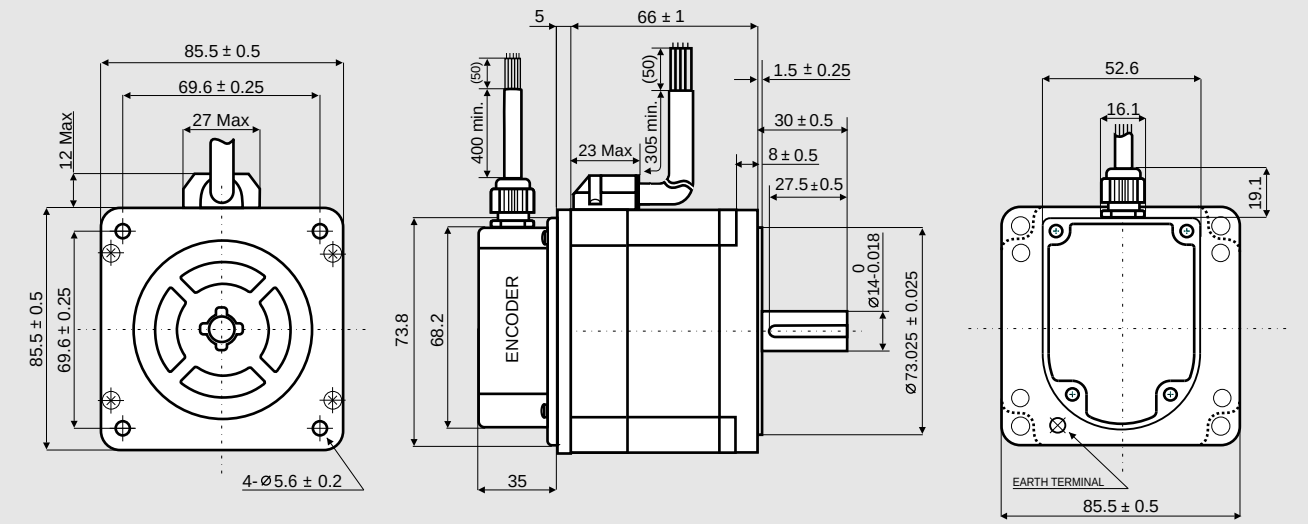


## SANYO DENKI MOTOR FEATURES

| MODEL | | EM 3F1L-04D0 |
|---|---|---|
| SANYO DENKI MOTOR CODE | | SM 2861-5025 |
| BASIC STEP ANGLE | | 1.8° ± 0.09° |
| BIPOLAR PARALLEL CURRENT | (Amp) | 2.0 |
| RESISTANCE | (Ohm) | 2.2 |
| INDUCTANCE | (mH) | 15 |
| BIPOLAR HOLDING TORQUE | (Ncm) | 360 |
| ROTOR INERTIA | ($Kgm^2 \times 10^{-7}$) | 1480 |
| THEORETICAL ACCELERATION | ($rad \times sec.^{-2}$) | 24300 |
| BACK E.M.F. | (V/Krpm) | 180 |
| MASS | (Kg) | 1.7 |
| INTERNATIONAL STANDARDS | | UL, CSA |
| INSULATION VOLTAGE | (V) | 250 VAC (350 VDC) |
| PROTECTION DEGREE - INSULATION CLASS | | IP43 - F |
| LEADS CODE | | V |

## ENCODER FEATURES

| | | |
|---|---|---|
| POWER SUPPLY VOLTAGE | (Volt) | 5 $V_{DC}$ ± 5% |
| CURRENT CONSUMPTION | (mAmp) | 40 |
| HIGH LEVEL OUTPUT | (Volt) | 3.4 (TIP) - 2.4 (MIN) ($I_{MAX}$=20 mA) |
| LOW LEVEL OUTPUT | (Volt) | 0.2 (TIP) - 0.4 (MAX) ($I_{MAX}$=20 mA) |
| OUTPUT SIGNAL | | Differential (SINGLE ENDED version available) |
| RESOLUTION | | 400 cycles per revolution (500 & 1000 CPR version available) |
| MAXIMUM FREQUENCY | (KHz) | 60 |
| INDEX VERSION | | Available upon request |

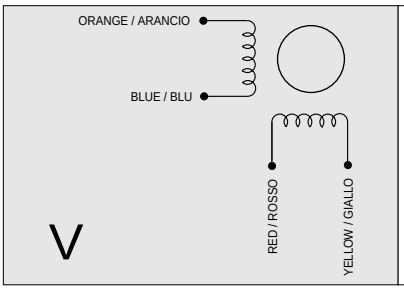


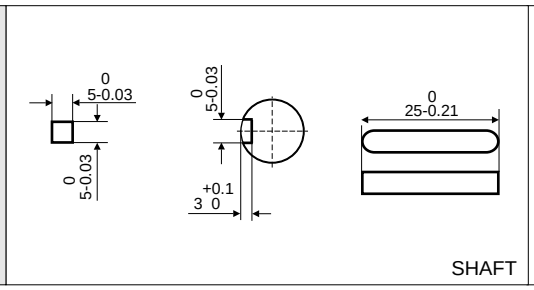


| LEADS COLOR | ENCODER |
|---|---|
| BROWN | CHANNEL A- |
| BLUE | CHANNEL A+ |
| PURPLE | CHANNEL B- |
| GREEN | CHANNEL B+ |
| BLACK | GND (0 V) |
| RED | + DC (5 V) |
| SHIELD | |

R.T.A. s.r.l. PAVIA (ITALY) SANYO DENKI CO.,Ltd (JAPAN)

# EM 3F2M-04D0

## Dimensions (Unit:mm)

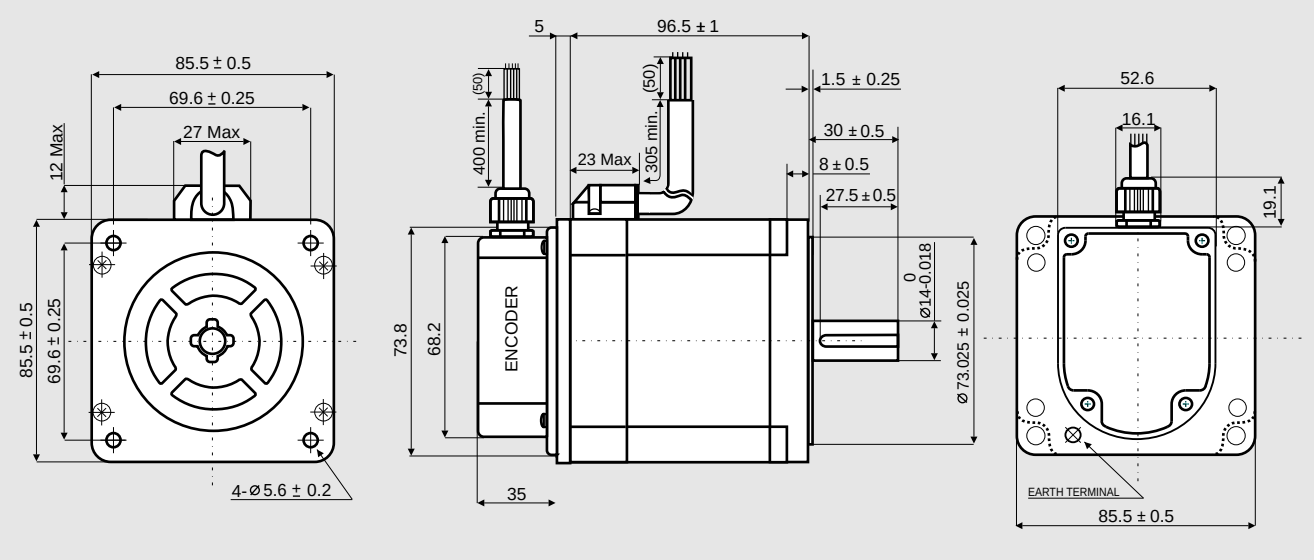


## SANYO DENKI MOTOR FEATURES

| MODEL | | EM 3F2M-04D0 |
|---|---|---|
| SANYO DENKI MOTOR CODE | | SM 2862-5125 |
| BASIC STEP ANGLE | | 1.8° ± 0.09° |
| BIPOLAR PARALLEL CURRENT | (Amp) | 4.0 |
| RESISTANCE | (Ohm) | 0.83 |
| INDUCTANCE | (mH) | 6.4 |
| BIPOLAR HOLDING TORQUE | (Ncm) | 700 |
| ROTOR INERTIA | ($Kgm^2 \times 10^{-7}$) | 3000 |
| THEORETICAL ACCELERATION | ($rad \times sec.^{-2}$) | 23300 |
| BACK E.M.F. | (V/Krpm) | 175 |
| MASS | (Kg) | 2.9 |
| INTERNATIONAL STANDARDS | | UL, CSA |
| INSULATION VOLTAGE | (V) | 250 VAC (350 VDC) |
| PROTECTION DEGREE - INSULATION CLASS | | IP43 - F |
| LEADS CODE | | V |

R.T.A. s.r.l. PAVIA (ITALY) SANYO DENKI CO.,Ltd (JAPAN)

## ENCODER FEATURES

| | | |
|---|---|---|
| POWER SUPPLY VOLTAGE | (Volt) | 5 $V_{DC}$ ± 5% |
| CURRENT CONSUMPTION | (mAmp) | 40 |
| HIGH LEVEL OUTPUT | (Volt) | 3.4 (TIP) - 2.4 (MIN) ($I_{MAX}$=20 mA) |
| LOW LEVEL OUTPUT | (Volt) | 0.2 (TIP) - 0.4 (MAX) ($I_{MAX}$=20 mA) |
| OUTPUT SIGNAL | | Differential (SINGLE ENDED version available) |
| RESOLUTION | | 400 cycles per revolution (500 & 1000 CPR version available) |
| MAXIMUM FREQUENCY | (KHz) | 60 |
| INDEX VERSION | | Available upon request |

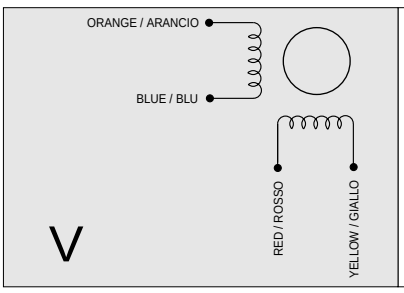


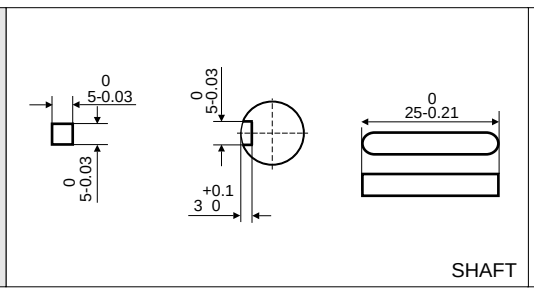


| LEADS COLOR | ENCODER |
|---|---|
| BROWN | CHANNEL A- |
| BLUE | CHANNEL A+ |
| PURPLE | CHANNEL B- |
| GREEN | CHANNEL B+ |
| BLACK | GND (0 V) |
| RED | + DC (5 V) |
| SHIELD | |

# EM 3F3M-14D0

## Dimensions (Unit:mm)

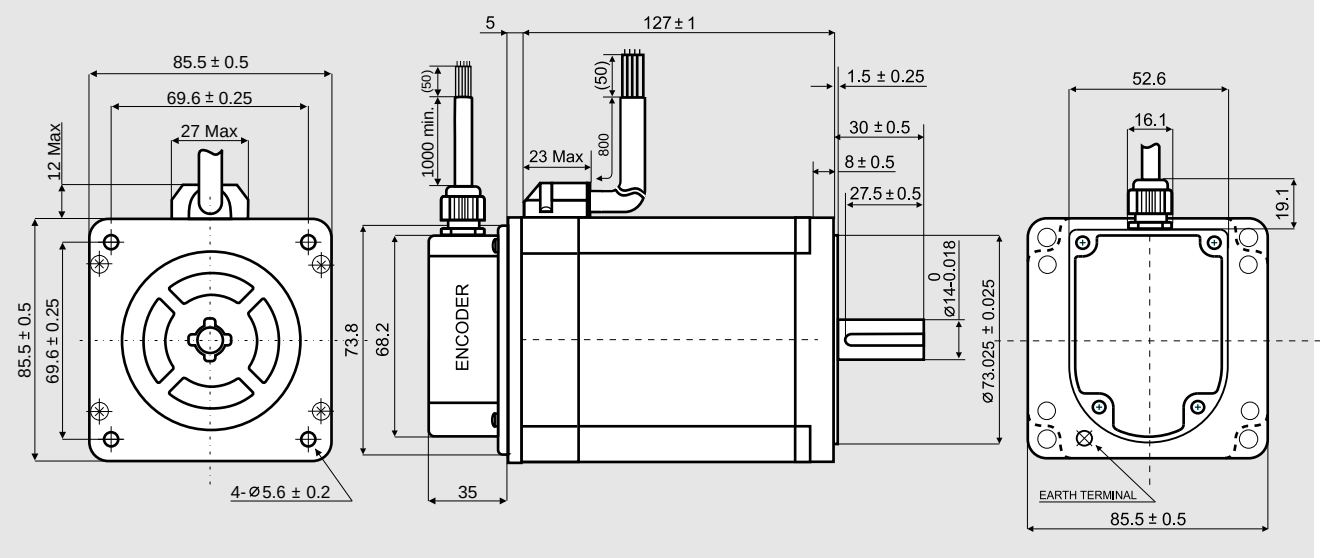


## SANYO DENKI MOTOR FEATURES

| MODEL | | EM 3F3M-14D0 |
|---|---|---|
| SANYO DENKI MOTOR CODE | | SM 2863-5126 |
| BASIC STEP ANGLE | | 1.8° ± 0.09° |
| BIPOLAR PARALLEL CURRENT | (Amp) | 4.0 |
| RESISTANCE | (Ohm) | 1.0 |
| INDUCTANCE | (mH) | 7.9 |
| BIPOLAR HOLDING TORQUE | (Ncm) | 920 |
| ROTOR INERTIA | ($Kgm^2 \times 10^{-7}$) | 4500 |
| THEORETICAL ACCELERATION | ($rad \times sec.^{-2}$) | 20500 |
| BACK E.M.F. | (V/Krpm) | 241 |
| MASS | (Kg) | 4.0 |
| INTERNATIONAL STANDARDS | | UL, CSA |
| INSULATION VOLTAGE | (V) | 250 VAC (350 VDC) |
| PROTECTION DEGREE - INSULATION CLASS | | IP43 - F |
| LEADS CODE | | V |

## ENCODER FEATURES

| | | |
|---|---|---|
| POWER SUPPLY VOLTAGE | (Volt) | 5 $V_{DC}$ ± 5% |
| CURRENT CONSUMPTION | (mAmp) | 40 |
| HIGH LEVEL OUTPUT | (Volt) | 3.4 (TIP) - 2.4 (MIN) ($I_{MAX}$=20 mA) |
| LOW LEVEL OUTPUT | (Volt) | 0.2 (TIP) - 0.4 (MAX) ($I_{MAX}$=20 mA) |
| OUTPUT SIGNAL | | Differential (SINGLE ENDED version available) |
| RESOLUTION | | 400 cycles per revolution (500 & 1000 CPR version available) |
| MAXIMUM FREQUENCY | (KHz) | 60 |
| INDEX VERSION | | Available upon request |

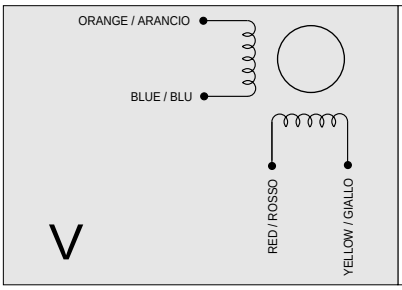


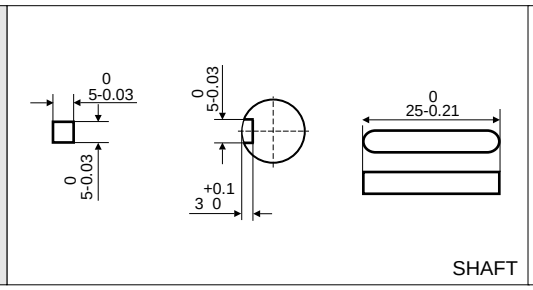


| LEADS COLOR | ENCODER |
|---|---|
| BROWN | CHANNEL A- |
| BLUE | CHANNEL A+ |
| PURPLE | CHANNEL B- |
| GREEN | CHANNEL B+ |
| BLACK | GND (0 V) |
| RED | + DC (5 V) |
| SHIELD | |

R.T.A. s.r.l. PAVIA (ITALY) SANYO DENKI CO.,Ltd (JAPAN)

## NOTES

## NOTES

## NOTES

HEADQUARTERS
R.T.A. s.r.l. - Via E. Mattei
Fraz. Divisa - 27020 MARCIGNAGO (PV)
Tel. +39.0382.929.855 - Fax +39.0382.929.150
www.rta.it - email: info@rta.it

NORTH-EAST BRANCH
Via D. Alighieri, 4/A - 30034 MIRA (VE)
Tel. +39.041.56.00.332 - Fax +39.041.56.00.165
email: rtane@rta.it

CENTER-SOUTH BRANCH
Via D. Alighieri, 41 - 60025 LORETO (AN)
Tel. +39.071.75.00.433 - Fax +39.071.97.77.64
email: rtacs@rta.it

R.T.A. Deutschland GmbH
Bublitzer Straße 34
40599 DÜSSELDORF (Germany)
Tel. +49.211.749.668.60
Fax +49.211.749.668.66
www.rta-deutschland.de
email: info@rta-deutschland.de

R.T.A. IBERICA - Motion Control Systems S.L.
C/ Generalitat 22, 1° 3°
08850 GAVA - BARCELONA (Spain)
Tel. +34.936.388.805
Fax +34.936.334.595
www.rta-iberica.es
email: info@rta-iberica.es

R.T.A. STORE
www.rta-store.com
www.rta-store.de
www.rta-store.es

EMC 10-14

Motion Control Systems

www.rta.it